Ohmeda

Service Manual

Excel Anesthesia System

1001-0010-000

This document is not to be reproduced in any manner, nor are the contents herein to be disclosed to anyone, without the express authorization of the Product Service Department, Ohmeda, Ohmeda Drive, Madison, Wisconsin 53707.

Copyright 1988, 1990, 1993 The BOC Group Inc

Important

Special Notice

Some information found in this manual may point the reader to electronic troubleshooting and component repair/replacement level. This information, when supplied, is only supplied to add clarity to service or troubleshooting statements. Ohmeda Service Personnel are mandated by Company Policy to service electronic equipment to a board level only. Component troubleshooting and replacement, if practiced, is the responsibility of the reader of this service and parts manual.

Read completely through each step in every procedure before starting the procedure; any exceptions may result in a failure to properly and safely complete the attempted procedure.

Certain terms are used throughout this manual:

Note: A note provides additional information to clarify a point in the text.

Important: An Important statement is similar to a note but used for greater emphasis.

⚠ **CAUTION:** A statement used when the possibility of damage to the equipment exists.

⚠ **WARNING:** A statement used when the possibility of injury to the patient or the operator exists.

Various pages in this manual have been purposely left blank and headed with **NOTES** for your convenience in noting information which may be unique to your anesthesia system.

Table of Contents

Important

1/Introduction
1.1 What This Manual Does and Does Not Cover 1-1
1.2 Summary of Excel Models - - Variations 1-1
1.3 Symbols, Warnings and Cautions 1-7

2/Theory of Operation
2.1 Pneumatic Overview - -Flow Through the Excel 2-1
A. ISO, Australian, Austrian, Spanish 110, or Italian Excels 2-1
B. Scandinavian, Swiss, or Spanish 210 Excels 2-5
C. German Excel 2-9
D. French Excel 2-12
2.2 Pneumatic Components 2-15
A. Gas Supply Modules 2-15
B. System Master Switch 2-18
C. Shutoff valve(s) 2-18
D. Air/N_2O Selector Switch 2-18
E. Flow Control Assembly 2-19
F. Vaporizer Manifold, Selectatec Series Manifold 2-24
G. Common Gas Outlet 2-24
H. Air Entrainment Valve 2-25
I. Low O_2 Pressure Alarm 2-25
J. Pneumatic Power Outlet 2-26
K. O_2 Flush Valve 2-27
L. Exhaust Block 2-27
2.3 Power Outlet Box (Accessory) 2-28
2.4 Integral Ventilators (7750 or 7800) 2-30
A. General 2-30
B. Use With French Excels (Dual Common Gas Outlet) 2-30

3/Checkout Procedure
3.1 Gas Machine Tests 3-1
3.2 System Check-Out 3-16
A. System Connections 3-16
B. Absorber Checks (Leak, APL Valve, and Check Valve Tests) 3-27
C. 7800 Bellows Checks (Retention, Pressure Relief, Leak Test) 3-29
D. Bellows (ABA) Pressure Leak Test 3-30
E. Check Monitor and Ventilator Alarms 3-31

4/Calibration and Adjustments
4.1 Adjusting and Testing Primary Regulators 4-1
4.2 Adjusting the Low O_2 Alarm 4-5
A. Check Adjustment 4-5
B. Adjustment Procedure 4-6
4.3 Adjusting and Testing the N_2O Secondary Regulator 4-9
4.4 Adjusting the N_2O and the O_2 Needle Valves and Link System 4-12
A. Check Adjustment 4-12
B. Adjustment Procedure 4-15
4.5 Adjusting Additional Gas Flow 4-26

Table of Contents

G. Regulator & Trap Rail Mount Kit 6-78
H. RGM Mounting Kits 6-79
I. Shelf Kits 6-81
J. Utility Mounting Posts 6-83
K. Vaporizer Storage Bracket 6-87
L. Ventilator Mounting Arms 6-88
6.5 Label Sets 6-92
6.6 Test Fixtures 6-100
6.7 Tools, Touch Up Paint, Sealants, Etc. 6-103

7/Schematics and Wiring Diagrams
7.1 Power Outlet Box Schematic 7-1
7.2 Outlet Box Wiring 7-2
7.3 Signal Routing -- Excel With 7750 or 7800 Ventilator 7-3
7.4 Pneumatic Schematics 7-4

8/Specifications
8.1 Physical Specifications 8-1
8.2 Pneumatics 8-2
8.3 Power outlet pressure as a function of the flow through the outlet 8-4

List of Illustrations

1/Introduction
None

2/Theory of Operation
Figure 2-1 ISO 210 Excel (Air, N_2O, O_2) and Austrian Excel 2-3
Figure 2-2 Australian 210 Excel, Italian Excel, or ISO 110 Excel 2-4
Figure 2-3 Swiss 210 or Spanish 210 Excel 2-7
Figure 2-4 Scandinavian 210 Excel 2-8
Figure 2-5 German 210 Excel 2-11
Figure 2-6 French 210 Excel 2-14
Figure 2-7 Minimum stops 2-21
Figure 2-8 Engaging the linkage 2-22
Figure 2-9 Maximum N_2O flow 2-23
Figure 2-10 Maximum additional gas flow 2-23
Figure 2-11 Power outlet box schematic 2-29
Figure 2-12 Excel system signal routing 2-32

3/Checkout Procedure
Figure 3-1 Monitoring connections 7800 ventilator with a GMS Absorber 3-17
Figure 3-2 Monitoring connections 7800 ventilator with a non Ohmeda absorber 3-18
Figure 3-3 Monitoring connections 7750 ventilator with a non Ohmeda absorber 3-19
Figure 3-4 Ventilator and Bellows Connections GMS Absorber with manifold 3-21
Figure 3-5 Ventilator and Bellows Connections without absorber manifold 3-22
Figure 3-6 7750 Ventilator non rebreathing circuit 3-23
Figure 3-7 7750 Drive Unit Connections to Absorber 3-24
Figure 3-8 Interface cable connections 3-25
Figure 3-9 French dual common gas outlet, O_2 monitoring connections 3-26

4/Calibration and Adjustments
Figure 4-1 Removing the gas supply cover 4-2
Figure 4-2 Primary regulator test connections 4-2
Figure 4-3 Primary regulator adjustments 4-4
Figure 4-4 Installing the gas supply cover 4-5
Figure 4-5 Removing tray top 4-7
Figure 4-6 Test connections low O_2 pressure alarm adjustment 4-7
Figure 4-7 Accessing the secondary regulator test points 4-9
Figure 4-8 Secondary regulator adjustments 4-10
Figure 4-9 Removing flowmeter shield 4-15
Figure 4-10 Adjusting the stop screw 4-18
Figure 4-11 Finding the minimum stop 4-19
Figure 4-12 Setting the kick-in point 4-21
Figure 4-13 Removing flowmeter shield 4-27
Figure 4-14 Additional gas needle valve 4-28

5/Repair Procedures
Figure 5-1 Replacing the check valve on the O_2 power outlet 5-2
Figure 5-2 Replacing the pressure relief valve on the common gas outlet 5-3
Figure 5-3 Removing the tray top 5-4

List of Illustrations

Figure 6-9 Low O_2 pressure alarm....6-21
Figure 6-10 Left fixed common gas outlet assembly....6-22
Figure 6-11 Swivel common gas outlet assembly....6-24
Figure 6-12 Tapered ISO common gas outlet....6-26
Figure 6-13 Dual port common gas outlet w/ separate flush (France)....6-28
Figure 6-14 What the fittings look like....6-30
Figure 6-15 Flowmeter modules, only four gas shown....6-32
Figure 6-16 Flowmeter modules, only four gas shown....6-34
Figure 6-17 Secondary regulator....6-36
Figure 6-18 Needle Valve assembly O_2....6-38
Figure 6-19 Needle Valve assembly nitrous oxide....6-40
Figure 6-20 Needle Valve assembly air/CO_2....6-42
Figure 6-21 Flowtube service kits....6-44
Figure 6-22 Front view....6-46
Figure 6-23 Vanity panel (France, Australia, Scandinavia, Germany and Switzerland only)....6-48
Figure 6-24 Front panels....6-50
Figure 6-25 Tray top....6-52
Figure 6-26 Light packages....6-53
Figure 6-27 Shelves style 2....6-54
Figure 6-28 Shelves style 1....6-55
Figure 6-29 Cabinet assembly 2 small, 1 large drawer....6-56
Figure 6-30 Standard cabinet w/ two, four inch drawers....6-58
Figure 6-31 Add on cabinet kit w/ two four inch drawers....6-60
Figure 6-32 Add on single eight inch drawer cabinet kit....6-61
Figure 6-33 Weight kits....6-62
Figure 6-34 7800 patient interface and cabling (all units except German)....6-63
Figure 6-35 German 7800 patient interface and cabling....6-64
Figure 6-36 Absorber post assembly....6-66
Figure 6-37 GMS Absorber mounting pins....6-68
Figure 6-38 Bain circuit adapter & 6000 monitor mounting kit....6-70
Figure 6-39 Cable management arm....6-72
Figure 6-40 Tycos gauge and arm....6-74
Figure 6-41 Rail mounted flowmeter....6-75
Figure 6-42 Gas scavenging system....6-76
Figure 6-43 Valve interface assembly....6-77
Figure 6-44 Regulator and water trap rail mount kit....6-78
Figure 6-45 RGM tray kit....6-79
Figure 6-46 RGM screen holder....6-80
Figure 6-47 Kit flip up shelf assembly....6-81
Figure 6-48 Instrument shelf assembly....6-82
Figure 6-49 Utility post assembly 1 x 3.5 x 6....6-83
Figure 6-50 Post utility 1 in x 3.5 in....6-84
Figure 6-51 Post utility 1 in x 20 in....6-85
Figure 6-52 IV pole assembly....6-86
Figure 6-53 Vaporizer storage bracket for Tec 4....6-87
Figure 6-54 7000 Ventilator remote arm....6-88
Figure 6-55 7800 Ventilator short remote arm....6-89
Figure 6-56 Integral mounting kit 7800 and 7000....6-90

1/Introduction

1.1 What This Manual Does and Does Not Cover

This manual covers three basic models, the 110 Excel, the 210 Excel, and the 410 Excel. The major differences between models are the number and type of gas connections, the number of vaporizers, and the frame width. All models come with N_2O and O_2 connections.

- The 110 Excel has only pipeline connections and two vaporizers.
- The 210 Excel typically has pipeline and cylinder connections and two vaporizers. It offers a choice of either a reserve N_2O or O_2 cylinder or an additional gas (air or CO_2).
- The 410 Excel has three vaporizers. It offers the choice of either: four gases plus a reserve O_2 cylinder or three gases plus reserve N_2O and O_2 cylinders.

The Excel Gas Machine is sold three ways, as a system with a 7800 or a 7750 ventilator or as a standalone gas machine.

A power outlet box can be used with any Excel. In addition to the standard, IEC power outlet box, models are available for Germany (TUV components and German Labels) and France (Additional mounting hardware and French Labels).

National variations include: gas color coding, gas routing, styles of common gas outlets, gas fittings, light packages and the presence or absence of the Air/N_2O selector switch and the air entrainment valve, and the style of Air/N_2O selector and system master switches.

Ventilators, vaporizers, absorbers and other system components each have their own service manuals.

1.2 Summary of Excel Models - - Variations

The following tables summarize the available Excel Models and identify national variations. For a description of gas flow through the Excel, refer to Section 2.1, Pneumatic Overview - -Flow Through the Excel:

- 2.1.A. ISO, Australian, Austrian, Spanish 110, or Italian Excels
- 2.1.B. Scandinavian, Swiss, or Spanish 210 Excels
- 2.1.C. German Excel
- 2.1.D. French Excel

For more information about a specific component or more detailed information about national differences (What is different about the German Air/N_2O selector switch?), refer to Section 2.2, Pneumatic Components.

All Excels include an internal cable for 7750 or 7800 connection; Flowtubes for O_2 & N_2O are dual unless otherwise stated

Country	Gases	Pipeline/ Cylinder Pressure	Pipeline/Cyl Fittings	Pneu Power Outlets	Color Code	Common Gas Outlet	Air Entrain. valve	Air/N_2O Switch	Sys Mstr Switch	Pecularities
Australia-210 1002-9024-000	O_2 cyl/pl N_2O cyl/pl Air cyl/pl	345/311-345 kPa (50/45-50 psig)	Australian std/pin indexed yoke	Mini Schraeder; (2) O_2 (1) Air	Air blk/wht N_2O Blue O_2 White	Left Fixed-internal check valve	No	No	Std Style	Vis O_2 Fail Indic Full middle & tilt upper shelf
Austria-210 1002-9036-000	O_2 cyl/pl N_2O cyl/pl Air cyl/pl	414/380-414 kPa (60/55-60 psig)	NIST/DIN	Mini Schraeder; (2) O_2 (1) Air	Air Gray N_2O Yellow O_2 Blue	Left Swivel	Yes	No	Std Style	O_2 flow control (different shape) Special cylinder supports
France-210 1002-9025-000	O_2 cyl/pl N_2O pl Air pl	345/311-345 kPa (50/45-50 psig)	Air Liquide/ pin indexed yoke	Mini Schraeder; (2) O_2 (1) Air	Air blk/wht N_2O Blue O_2 White	Left fixed Dual Common Gas Out (DCGO) seperate flush valve assembly	No	Yes Std style	Std Style	30% O_2 nominal Max O_2 16±1 l/min N_2O secondary pressure regulator 193-207 kPa at 2 l/min O_2 secondary pressure regulator 143-169 kPa at2 l/min French O_2 & N_2O needle valves French power outlet box Remove mid shelf for 7750 Ventilator checks DCGO selection
German 210 1002-9057-000	O_2 cyl/pl N_2O cyl/pl O_2 cyl/Air pl	500/ 380-414 kPa (75/55-60 psig) 311-345 kPa (45-50 psig) for Reserve O_2	DIN/pin indexed yoke (O_2 &N_2O) DIN (Reserve O_2)	Mini Schraeder; (2)O_2 (1) Air	Air Yellow N_2O Gray O_2 Blue	Tapered ISO- no check valve	No	Yes German style	Ger-man	German power outlet box (TUV) Air flow continues at set rate if O_2 supply fails. No exhaust block
ISO-110 1005-9040-000	O_2 pl N_2O pl	414 kPa (60 psig) pl	NIST	Mini Schraeder; (2) O_2	N_2O Blue O_2 White	Left Fixed-internal check valve	No	No	Std Style	None

All Excels include an internal cable for 7750 or 7800 connection; Flowtubes for O_2 & N_2O are dual unless otherwise stated

Country	Gases	Pipeline/ Cylinder Pressure	Pipeline/Cyl Fittings	Pneu Power Outlets	Color Code	Common Gas Outlet	Air Entrain. valve	Air/N_2O Switch	Sys Mstr Switch	Pecularities
ISO-210	Varies	414/380-414 kPa (60/55-60 psig) CO2: 207 kPa (30 psig)	NIST/pin indexed yoke	Mini Schraeder; (2) O_2 + (1) Air if air installed	Air blk/wht N_2O Blue O_2 White CO_2 Gray	Left or Right Swivel	Yes	No	Std Style	N_2O & O_2 flow tubes come in single & double
1002-9000-000	O_2 cyl/pl, N_2O cyl/pl Air cyl/pl	"	"	"	"	Right	"	"	"	Double flowtubes
1002-9001-000	O_2 cyl/pl, N_2O cyl/pl CO_2 cyl	"	"	"	"	Right	"	"	"	Double flowtubes
1002-9005-000	O_2 cyl/pl, N_2O cyl/pl CO_2 cyl	"	"	"	"	Right	"	"	"	Single flowtubes
1002-9014-000	O_2 cyl/pl, N_2O cyl/pl Air cyl/pl	"	"	"	"	Left	"	"	"	Double flowtubes
1002-9016-000	O_2 cyl/pl O_2 cyl N_2O cyl/pl	"	"	"	"	Right	"	"	"	Double flowtubes
1002-9018-000	O_2 cyl/pl O_2 cyl N_2O cyl/pl	"	"	"	"	Left	"	"	"	Double flowtubes
1002-9038-000	O_2 cyl/pl N_2O cyl/pl N_2O cyl	"	"	"	"	Right	"	"	"	Double flowtubes
1002-9010-000	O_2 cyl/pl, N_2O cyl/pl CO_2 cyl	"	"	"	"	Left	"	"	"	Double flowtubes

All Excels include an internal cable for 7750 or 7800 connection; Flowtubes for O_2 & N_2O are dual unless otherwise stated

Country	Gases	Pipeline/ Cylinder Pressure	Pipeline/Cyl Fittings	Pneu Power Outlets	Color Code	Common Gas Outlet	Air Entrain. valve	Air/N_2O Switch	Sys Mstr Switch	Pecularities
ISO-410	Varies	414/380-414 kPa (60/55-60 psig) CO2: 207 kPa (30 psig)	NIST/pin indexed yoke	Mini Schraeder; (2) O_2 + (1) Air if air installed	Air blk/wht N_2O Blue O_2 White CO_2 Gray	Left or Right Swivel	Yes	No	Std Style	N_2O & O_2 flow tubes come in single & double
1004-9000-000	O_2 cyl/pl O_2 cyl N_2O cyl/pl Air cyl/pl CO_2 cyl	"	"	"	"	Right	"	"	"	Double flowtubes
1004-9001-000	O_2 cyl/pl O_2 cyl N_2O cyl/pl Air cyl/pl CO_2 cyl	"	"	"	"	Left	"	"	"	Single flowtubes
1004-9006-000	O_2 cyl/pl O_2 cyl N_2O cyl/pl Air cyl/pl CO_2 cyl	"	"	"	"	Left	"	"	"	Double flowtubes
1004-9010-000	O_2 cyl/pl O_2 cyl N_2O cyl/pl N_2O cyl CO_2 cyl	"	"	"	"	Right	"	"	"	Double flowtubes
1004-9012-000	O_2 cyl/pl O_2 cyl N_2O cyl/pl N_2O cyl CO_2 cyl	"	"	"	"	Left	"	"	"	Double flowtubes
1004-9013-000	O_2 cyl/pl O_2 cyl N_2O cyl/pl N_2O cyl Air cyl/pl	"	"	"	"	Right	"	"	"	Double flowtubes

1/Introduction

All Excels include an internal cable for 7750 or 7800 connection; Flowtubes for O_2 & N_2O are dual unless otherwise stated

Country	Gases	Pipeline/ Cylinder Pressure	Pipeline/Cyl Fittings	Pneu Power Outlets	Color Code	Common Gas Outlet	Air Entrain. valve	Air/N_2O Switch	Sys Mstr Switch	Pecularities
ISO-410	Varies	414/380-414 kPa (60/55-60 psig) CO2: 207 kPa (30 psig)	NIST/pin indexed yoke	Mini Schraeder; (2) O_2 + (1) Air if air installed	Air blk/wht N_2O Blue O_2 White CO_2 Gray	Left or Right Swivel	Yes	No	Std Style	N_2O & O_2 flow tubes come in single & double
1004-9015-000	O_2 cyl/pl O_2 cyl N_2O cyl/pl N_2O cyl Air cyl/pl	"	"	"	"	Left	"	"	"	Double flowtubes
Italy 110 1005-9007-000	O_2 pl N_2O pl	414 kPa (60 psig) pl	NIST	Mini Schraeder; (2) O_2	N_2O Blue O_2 White	Left Fixed-internal check valve	No	No	Std	Large cylinder kit (210 &110 use different kits)
Italy 210 1002-9022-000	O_2 pl N_2O pl Air pl	414 kPa (60 psig) pl	NIST	Mini Schraeder; (2) O_2 + (1) Air	Air blk/wht N_2O Blue O_2 White	Left Fixed-internal check valve	No	No	Std	Large cylinder kit (210 &110 use different kits)
Scand-inavia 210 1002-9053-000	O_2 cyl/pl N_2O cyl/pl Air cyl/pl	414/380-414 kPa (60/55-60 psig)	Spri /pin indexed yoke	National Standard; (1) O_2 (1) Air on each side	Air blk/wht N_2O Blue O_2 White	Tapered ISO- no check valve	No	Yes Std Style	Std	Single vaporizer manifold Two different power outlets one for left & one for right side
Spain-110 1005-9006-000	O_2 pl N_2O pl	414 kPa (60 psig) pl	NIST	Mini Schraeder; (2) O_2	N_2O Blue O_2 White	Left Swivel	Yes	Yes Std Style	Std	No
Spain- 210 1002-9020-000	O_2 pl N_2O pl Air pl	414 kPa (60 psig) pl	NIST	Mini Schraeder; (2) O_2 + (1) Air	Air blk/wht N_2O Blue O_2 White	Left Swivel	Yes	Yes Std Style	Std	No
Switzer-land 210 1002-9031-000	O_2 cyl/pl N_2O cyl/pl Air cyl/pl	414/380-414 kPa (60/55-60 psig)	DISS Male/pin indexed yoke	Mini Schraeder; (2) O_2 (1) Air	Air Brown N_2O Green O_2 Blue	Left Swivel	Yes	Yes Std Style	Std	No

Country	Number of Vaporizers	Style of Exhaust Block	Light Package	Vanity Panel
Australia-210	2	Checkvalve	No	Yes
Austria-210	2	No Checkvalve	No	No
France-210	2	Checkvalve	Yes	Yes
German 210	2	None	Yes	Yes
ISO-110	2	Checkvalve	No	No
ISO-210	2	No Checkvalve	No	No
ISO-410	3	No Checkvalve	No	No
Italy 110/210	2	Checkvalve	No	No
Scandinavia 210	1	Checkvalve	No	Yes
Spain-110/210	2	No Checkvalve	No	No
Switzerland - 210	2	No Checkvalve	No	Yes

1.3 Symbols, Warnings and Cautions

We have also used—both in the manual and on the device itself—symbols to represent some common terms. No one product or manual has every symbol listed. Refer to this listing concerning symbols found on various products and manuals. These symbols include:

On (power)

Off (power)

Standby

Standby or preparatory state for a part of the equipment

"ON" only for part of the equipment

"OFF" only for part of the equipment

Direct Current

Alternating Current

Protective earth ground

Earth Ground

Frame or chassis ground

Alarm silence button

Equipotential

Variability

Variability in steps

Plus, positive polarity

Minus, negative polarity

Lamp, lighting, illumination

Movement in one direction

Movement in both directions

Lock

Unlock

Non-autoclavable

Type B equipment

Type BF equipment

Type CF equipment

Warning ISO 7000-0085

Caution, ISO 7000-0434

Attention, consult accompanying documents, IEC 601-1

This way up

Dangerous Voltage

Input

Output

2/Theory of Operation

⚠WARNING: Any ventilator used with the Excel must have a high pressure alarm and relief system for the patient circuit.

⚠WARNING: The Ohmeda Excel System must only be used with non-flammable anesthetic agents.

⚠WARNING: Shock Hazard. Always plug the Excel power cord into a grounded, three wire, hospital grade receptacle.

2.1 Pneumatic Overview - - Flow Through the Excel

This section traces gas flow through the Excel. Excels are grouped according to major differences in the pneumatic circuitry:

- ISO, Australian, Spanish 110, Austrian, or Italian Excels do not have an Air/N_2O selector switch.
- Scandinavian, Swiss and Spanish 210 Excels have a standard Air/N_2O selector switch.
- German Excels: German Excels do not have an air shutoff valve. They route air through the system master switch and the Air/N_2O selector switch. This allows continued air flow at the selected rate during an O_2 supply failure.
- French Excels: French Excels use a non standard flowmeter, a dual port common gas outlet, and a standard Air/N_2O selector switch.

Not all Excels grouped together have the same label colors, pipeline connections, or operating pressures. Section 1.2, Excel Model Summary, summarizes variations by country and Stock Number. Section 2.2, Pneumatic Components, provides more detailed information on individual components.

A. ISO, Australian, Austrian, Spanish 110, or Italian Excels

Important: The ISO, Australian, Austrian, Spanish 110, or Italian Excels do not have an Air/N_2O selector switch. Figure 2-1 summarizes ISO 410, 210, Spanish 110, and Austrian Excel Specifications. Figure 2-2 summarizes Australian, Italian, and ISO 110 Excel specifications.

The Excel Gas Machine consists of the gas supply modules, the flowtubes and controls responsible for gas concentration, the vaporizer assemblies, and specialized alarm and "ON" /"OFF" functions provided by the O_2 supply. Most of the pneumatic circuitry is located underneath the tabletop.

A typical gas supply module contains two parallel branches, pipeline and cylinder. The pipeline branch has a filtered pipeline connection and a pipeline pressure gauge. The cylinder branch has a filtered cylinder connection, a

cylinder gauge, and the primary regulator. Yoke plugs are required to help prevent leaks when cylinders are not connected.

Always close cylinder valves when pipeline supplies are connected. If pipeline and cylinder pressures equalize, both supplies may be used simultaneously, leaving no reserve supply. A pressure relief valve in each gas supply module limits the maximum supply pressure.

O_2 and, if present, air flows directly to the power outlets to provide drive gas for pneumatic accessories.

Shutoff valves control the flow of N_2O, Air, and CO_2 to the flow control valves. The shutoff valves are opened by O_2 pressure at a control port. When the system master switch is set to "OFF" the valves are closed. When the system master switch is set to "ON," O_2 pressure opens the shutoff valves. As long as the O_2 control pressure remains above the minimum level, the shutoff valves remain open. If pressure drops below this level, the shutoff valves close, stopping flow.

You should see O_2 flow through the O_2 flowtube whenever the system master switch is "ON," even if the O_2 flow control is turned completely clockwise (minimum flow).

Secondary regulators reduce the O_2 and N_2O pressures to the levels required by the flow controls. Air and CO_2 flow directly from the shutoff valve to the flow control. A chain linkage on the N_2O and O_2 flow control knobs helps maintain the minimum O_2 concentration at a nominal 25% for N_2O and O_2 mixtures. A system of mechanical stops limits the maximum and minimum flows.

The mixed gas output of the flowmeter assembly goes through the selected vaporizer to the common gas outlet and into the patient circuit. A pressure relief valve on the common gas outlet limits the maximum outlet pressure.

Pressing the "Flush" button delivers high flows of O_2 directly to the common gas outlet regardless of the position of the system master switch.

The same pilot pressure that opens the shutoff valves pressurizes the alarm canister. The alarm regulator keeps the O_2 in the canister as long as supply pressure exceeds the alarm threshold. If the O_2 supply pressure falls below this level, gas exits the canister through the alarm regulator to a flow regulator and a reed alarm.

During an O_2 supply failure, units with a swivel common gas outlet (the ISO 210 Excel and 410, and the Austrian Excel) allow the patient to breathe spontaneously through the air entrainment valve in the common gas outlet. When an O_2 supply is present, the pilot O_2 pressure holds the valve shut. Without the pilot O_2 pressure, 10 cm H_2O effort opens the valve. As air enters the valve, it goes over a reed alarm.

The Italian Excel, the Australian Excel and the ISO 110 Excel, use fixed left hand outlets that do not have an air entrainment valve.

ISO 210/410, Austrian 210 or Spanish 110 Excels

Key to Subassembly Abbreviations

CGO	Common Gas Outlet
CYL	Cylinder Yoke (cylinder supplies not used on the Excel 110)
GSM	Gas Supply Module (O_2, N_2O, Air and CO_2)
FM	Flowmeter
PA	Pneumatic Alarm (triggers at 207±21 kPa)
PL	Pipeline Connection (nominal 414 kPa)
PO	Power Outlets (O_2 and Air, if present)
VM	Vaporizer Manifold

Key to Numbered Components

1. Pipeline Pressure Gauge
2. Regulators
   a. Primary Regulator (O_2, N_2O, Air 380 to 414 kPa, CO_2 207 kPa)
   b. Alarm Regulator (Sets pneumatic alarm threshold)
   c. Flow Regulator (Sets pneumatic alarm duration at 7 sec minimum)
   d. Secondary Regulator (262±3.5 kPa for N_2O; 143±26 kPa for O_2 at 2 L/min)
   e. Air Entrainment Valve Regulator
3. Cylinder Pressure Gauge
4. Pressure Relief Valves
   a. 690 kPa
   b. 27.6 to 38.0 kPa at 200 mL/min
5. Switches
   a. System Master Switch (Current style)
   b. Vaporizer Selector Switch
   c. System Master Switch (Older style)
6. Alarm Reservoir
7. Whistle
8. Shutoff Valve (O_2 pressure > 138 kPa opens valve)
9. Secondary Regulator Test Points
10. Flow Control Needle Valves
    (Maximum flows: O_2 10 - 14 L/min; N_2O 10 - 12 L/min; Air 15 - 17 L/min; CO_2 2 L/min or 500 to 550 mL/min)
    (Minimum flows: O_2 175 to 225 mL/min; all other gases, 0 L/min)
11. Flowtube Assembly
12. Anesthetic Vaporizer
13. Flush Button/Valve (35 to 70 L/min O_2 flush flow)
14. Air Entrainment Valve (Nominal 10 cm H_2O effort to open during O_2 supply failure)

Key to Unnumbered Symbols

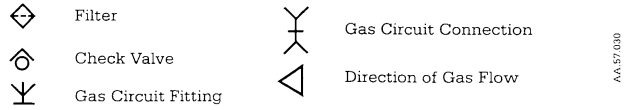

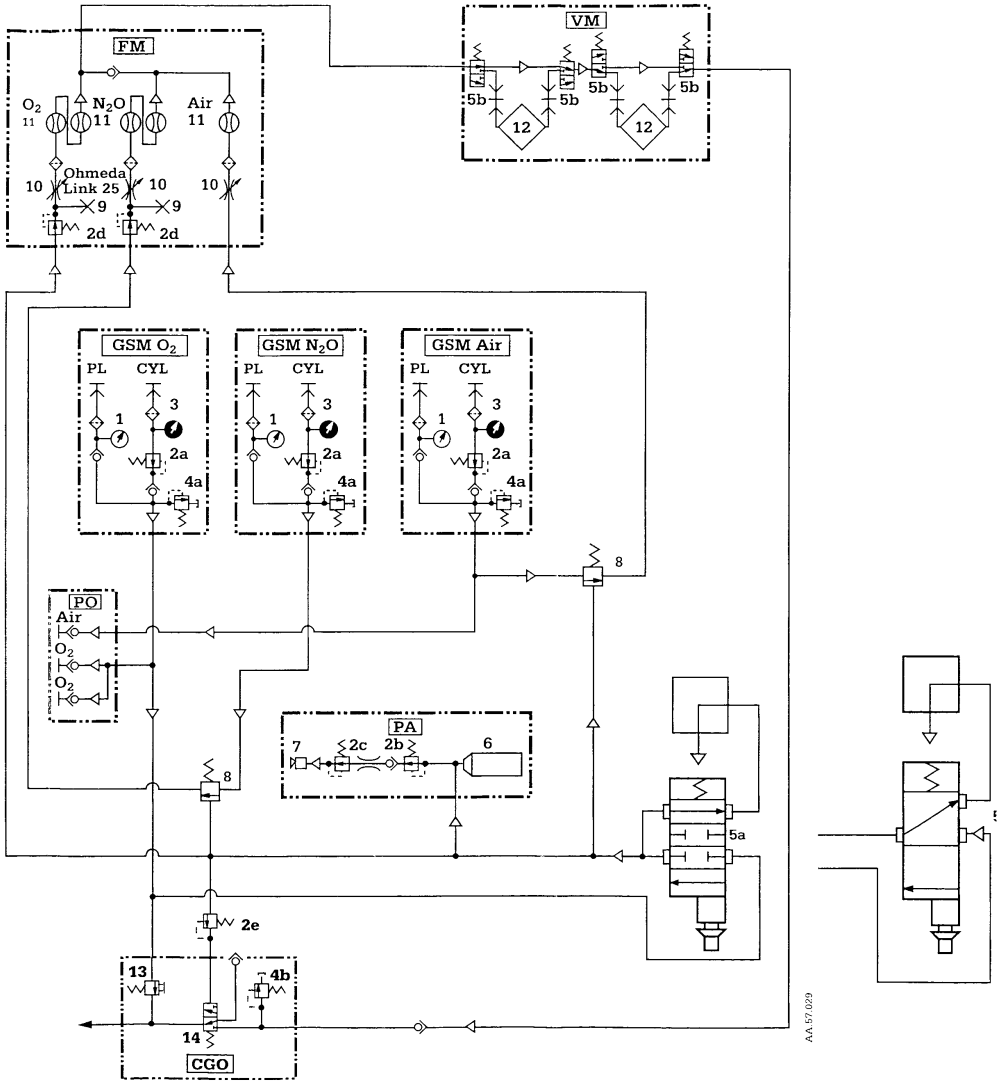

Figure 2-1 ISO 210 Excel (Air, N_2O, O_2) and Austrian Excel; 410 Excel has one additional gas supply; Spanish 110 Excel has only pipeline N_2O and O_2

Australian 210, Italian 110/210, or ISO 110 Excels

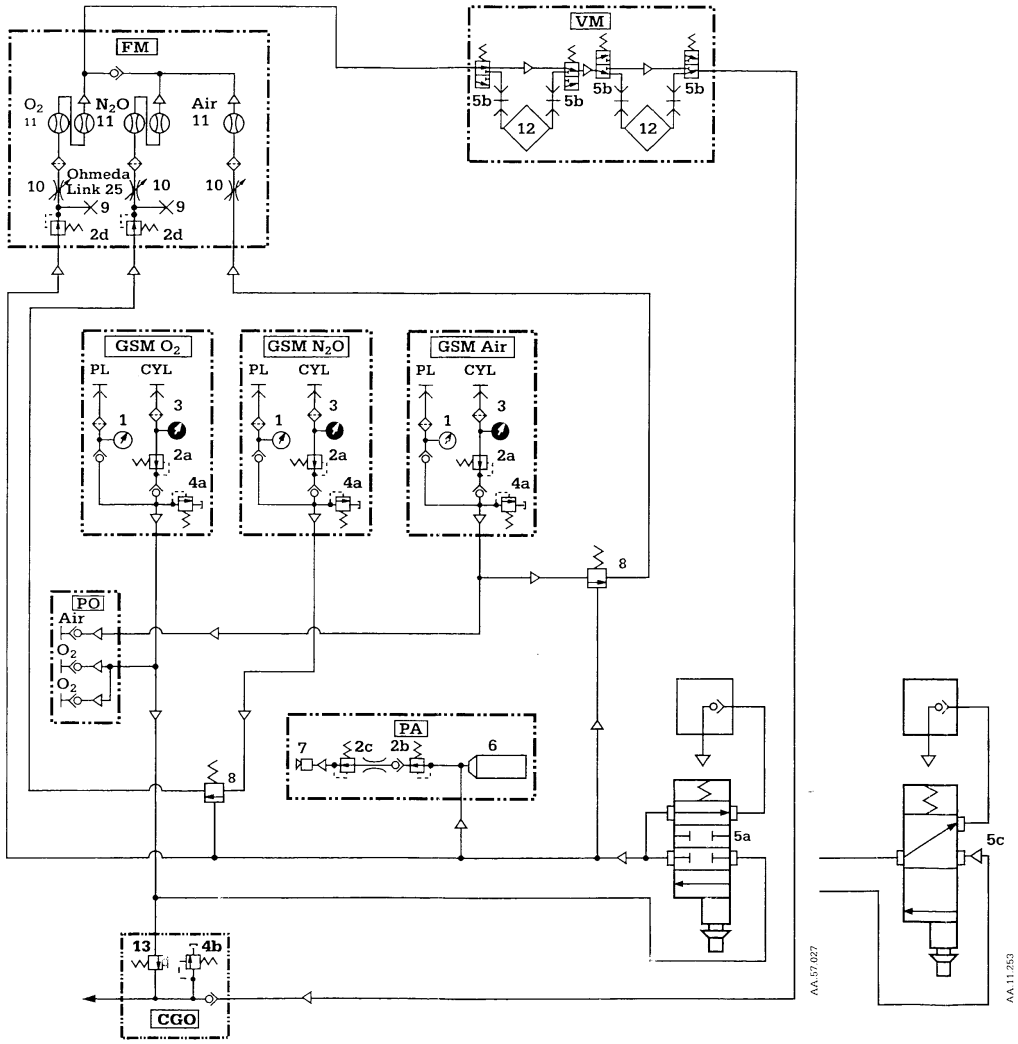

Key to Subassembly Abbreviations

CGO	Common Gas Outlet
CYL	Cylinder Yoke (cylinder supplies not used on the Excel 110 or Italian Excels)
GSM	Gas Supply Module (O_2, N_2O, and Air)
FM	Flowmeter
PA	Pneumatic Alarm (triggers at 207±21 kPa)
PL	Pipeline Connection (nominal 414 kPa except for Australian units which use a nominal 345 kPa)
PO	Power Outlets (O_2 and Air, if present)
VM	Vaporizer Manifold

Key to Numbered Components

1. Pipeline Pressure Gauge
2. Regulators
   a. Primary Regulator (O_2, N_2O, Air 380 to 414 kPa, except for Australian units, O_2, N_2O, Air 311 to 345 kPa)
   b. Alarm Regulator (Sets pneumatic alarm threshold)
   c. Flow Regulator (Sets pneumatic alarm duration at 7 sec minimum)
   d. Secondary Regulator (262±3.5 kPa for N_2O; 143±26 kPa for O_2 at 2 L/min)
3. Cylinder Pressure Gauge
4. Pressure Relief Valves
   a. 690 kPa
   b. 27.6 to 38.0 kPa at 200 mL/min
5. Switches
   a. System Master Switch (Current style)
   b. Vaporizer Selector Switch
   c. System Master Switch (Older style)
6. Alarm Reservoir
7. Whistle
8. Shutoff Valve (O_2 pressure > 138 kPa opens valve)
9. Secondary Regulator Test Points
10. Flow Control Needle Valves
    (Maximum flows: O_2 10 - 14 L/min; N_2O 10 - 12 L/min; Air 15 - 17 L/min)
    (Minimum flows: O_2 175 to 225 mL/min; all other gases, 0 L/min)
11. Flowtube Assembly
12. Anesthetic Vaporizer
13. Flush Button/Valve (35 to 70 L/min O_2 flush flow)

Key to Unnumbered Symbols

- Filter
- Check Valve
- Gas Circuit Fitting
- Gas Circuit Connection
- Direction of Gas Flow

AA.57.031

Figure 2-2 Australian 210 Excel, Italian 110/210 Excel, or ISO 110 Excel with a fixe left hand common gas outlet (the Italian Excel and the ISO 110 Excel ha only pipeline supplies; the 110 Excel does not offer air)

B. Scandinavian, Swiss, or Spanish 210 Excels

Important: Scandinavian, Swiss, or Spanish 210 Excels have a standard Air/N_2O selector switch. Figure 2-3 summarizes Spanish and Swiss 210 specifications. Figure 2-4 summarizes Scandinavian specifications.

The Excel Gas Machine consists of the gas supply modules, the flowtubes and controls responsible for gas concentration, the vaporizer assemblies, and specialized alarm and "ON" /"OFF" functions provided by the O_2 supply. Most of the pneumatic circuitry is located underneath the tabletop.

Scandinavian, Swiss, or Spanish 210 Excels have three gas supply modules: O_2, N_2O, and Air. Scandinavian and Swiss Excels have both pipeline and cylinder connections. Spanish Excels have only pipeline connections.

A typical gas supply module contains two parallel branches, pipeline and cylinder. The pipeline branch has a filtered pipeline connection and a pipeline pressure gauge. The cylinder branch has a filtered cylinder connection, a cylinder gauge, and the primary regulator. Yoke plugs are required to help prevent leaks when cylinders are not connected.

Always close cylinder valves when pipeline supplies are connected. If pipeline and cylinder pressures equalize, both supplies may be used simultaneously, leaving no reserve supply. A pressure relief valve in each gas supply module limits the maximum supply pressure.

O_2 and air flow directly to the power outlets to provide drive gas for pneumatic accessories.

Shutoff valves and the Air/N_2O selector switch control the flow of N_2O and air to the flow control valves. The shutoff valves are opened by O_2 pressure at a control port. When the system master switch is set to "OFF" the valves are closed. When the system master switch is set to "ON," pilot O_2 pressure routed through the Air/N_2O selector switch opens the selected shutoff valve.

As long as the O_2 control pressure remains above the minimum level, the shutoff valves remain open. If pressure drops below this level, the shutoff valves close, stopping flow.

You should see O_2 flow through the O_2 flowtube whenever the system master switch is "ON," even if the O_2 flow control is turned completely clockwise (minimum flow).

Secondary regulators reduce the O_2 and N_2O pressures to the levels required by the flow controls. Air flows directly from the shutoff valve to the flow control. A chain linkage on the N_2O and O_2 flow control knobs helps maintain the minimum O_2 concentration at a nominal 25% for N_2O and O_2 mixtures. A system of mechanical stops limits the maximum and minimum flows.

The mixed gas output of the flowmeter assembly goes through the selected vaporizer to the common gas outlet and into the patient circuit. A pressure relief valve on the common gas outlet limits the maximum outlet pressure.

Pressing the "Flush" button delivers high flows of O_2 directly to the common gas outlet regardless of the position of the system master switch.

The same pilot pressure that opens the shutoff valves pressurizes the alarm canister. The alarm regulator keeps the O_2 in the canister as long as supply pressure exceeds the alarm threshold. If the O_2 supply pressure falls below this level, gas exits the canister through the alarm regulator to a flow regulator and a reed alarm.

During an O_2 supply failure, units with a swivel common gas outlet (the Spanish 210 Excel and the Swiss Excel) allow the patient to breathe spontaneously through the air entrainment valve in the common gas outlet. When an O_2 supply is present, the pilot O_2 pressure holds the valve shut. Without the pilot O_2 pressure, 10 cm H_2O effort opens the valve. As air enters the valve, it goes over a reed alarm.

The Scandinavian Excel uses a tapered, fixed ISO style common gas outlet that does not have an air entrainment valve or a check valve.

Swiss 210 or Spanish 210 E

Key to Subassembly Abbreviat

CGO	Common Gas Outlet
CYL	Cylinder Yoke (cylinder supplies not use
GSM	Gas Supply Module (O_2, N_2O, and Air)
FM	Flowmeter
PA	Pneumatic Alarm (triggers at 207±21 kP
PL	Pipeline Connection (nominal 414 kPa)
PO	Power Outlets (O_2 and Air)
VM	Vaporizer Manifold

Key to Numbered Components

1. Pipeline Pressure Gauge
2. Regulators
   a. Primary Regulator (O_2, N_2O, Air 380 to 4
   b. Alarm Regulator (Sets pneumatic alarm
   c. Flow Regulator (Sets pneumatic alarm c
   d. Secondary Regulator (262±3.5 kPa for N
   e. Air Entrainment Valve Regulator
3. Cylinder Pressure Gauge
4. Pressure Relief Valves
   a. 690 kPa
   b. 27.6 to 38.0 kPa at 200 mL/min
5. Switches
   a. System Master Switch (Current style)
   b. Vaporizer Selector Switch
   c. Air/N_2O Selector Switch
   d. System Master Switch (Older style)
6. Alarm Reservoir
7. Whistle
8. Shutoff Valve (O_2 pressure > 138 kPa opens
9. Secondary Regulator Test Points
10. Flow Control Needle Valves
    (Maximum flows: O_2 10 - 14 L/min; N_2O 10
    (Minimum flows: O_2 175 to 225 mL/min; all
11. Flowtube Assembly
12. Anesthetic Vaporizer
13. Flush Button/Valve (35 to 70 L/min)
14. Air Entrainment Valve (Nominal 10 cm H_2O

Key to Unnumbered Symbols

Filter

Check Valve

Gas Circuit Fitting

Gas Ci

Directi

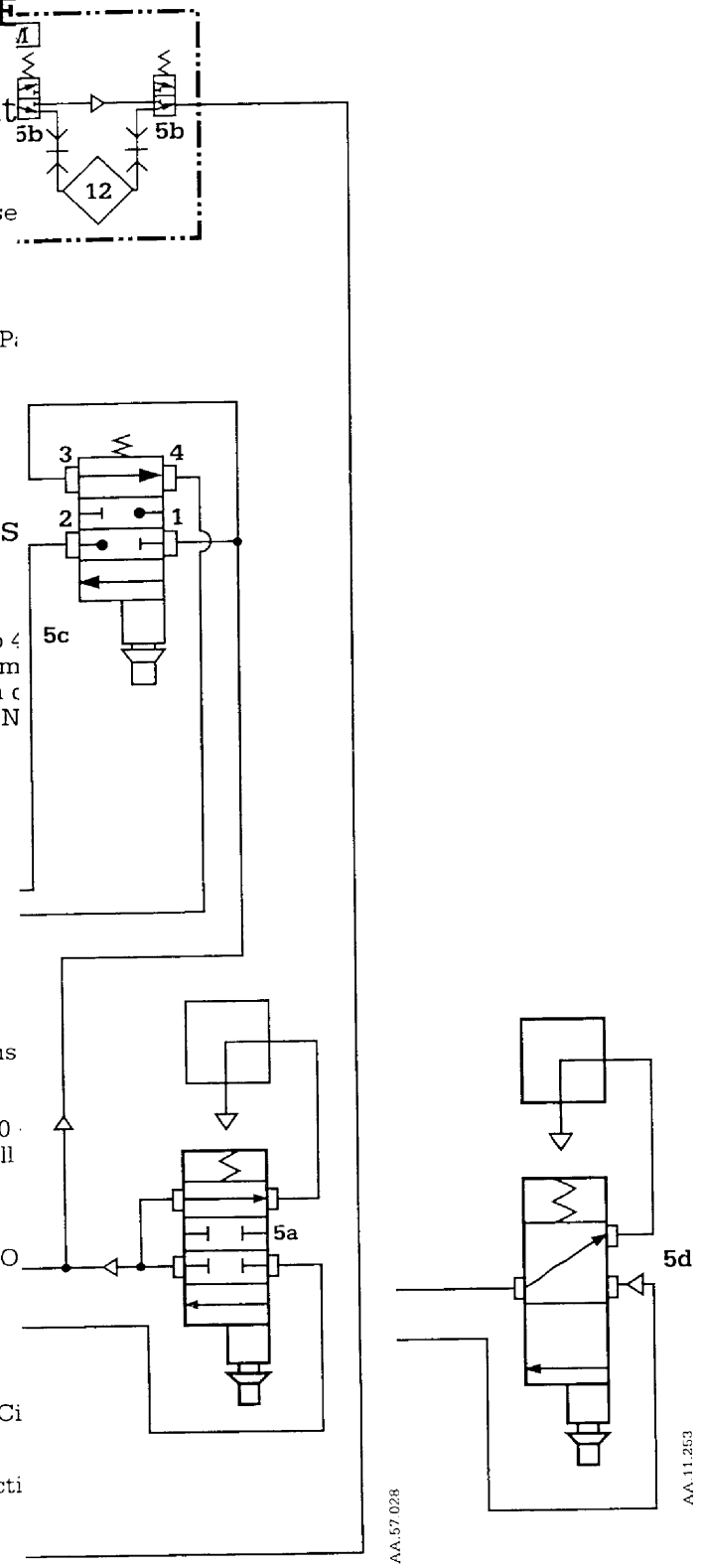

Figure 2-3 Swiss 210 or Spanish 210 E
supplies)

Scandinavian 210 Excel

Key to Subassembly Abbreviations

CGO	Common Gas Outlet
CYL	Cylinder Yoke
GSM	Gas Supply Module (O_2, N_2O, and Air)
FM	Flowmeter
PA	Pneumatic Alarm (triggers at 207±21 kPa)
PL	Pipeline Connection (nominal 414 kPa)
PO	Power Outlets (O_2 and Air)
VM	Vaporizer Manifold

Key to Numbered Components

1. Pipeline Pressure Gauge
2. Regulators
   a. Primary Regulator (O_2, N_2O, Air 380 to 414 kPa)
   b. Alarm Regulator (Sets pneumatic alarm threshold)
   c. Flow Regulator (Sets pneumatic alarm duration at 7 sec minimum)
   d. Secondary Regulator (262±3.5 kPa for N_2O; 143±26 kPa for O_2 at 2 L/min)
3. Cylinder Pressure Gauge
4. Pressure Relief Valves
   a. 690 kPa
   b. 27.6 to 38.0 kPa at 200 mL/min
5. Switches
   a. System Master Switch
   b. Vaporizer Selector Switch
   c. Air/N_2O Switch
6. Alarm Reservoir
7. Whistle
8. Shutoff Valve (O_2 pressure > 138 kPa opens valve)
9. Secondary Regulator Test Points
10. Flow Control Needle Valves
    (Maximum flows: O_2 10 - 14 L/min; N_2O 10 - 12 L/min; Air 15 - 17 L/min)
    (Minimum flows: O_2 175 to 225 mL/min; all other gases, 0 L/min)
11. Flowtube Assembly
12. Anesthetic Vaporizer
13. Flush Button/Valve (35 to 70 L/min O_2 flush flow)

Key to Unnumbered Symbols

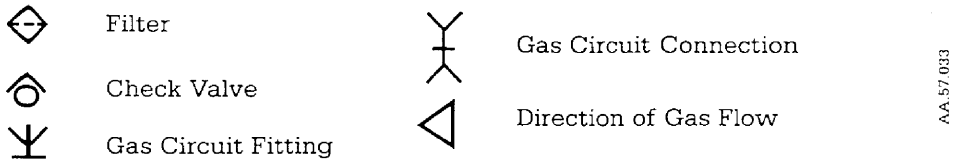

Figure 2-4 Scandinavian 210 Excel

C. German Excel

Note: Figure 2-5 summarizes German Excel specifications.

The Excel Gas Machine consists of the gas supply modules, the flowtubes and controls responsible for gas concentration, the vaporizer assemblies, and specialized alarm and "ON" /"OFF" functions provided by the O_2 supply. Most of the pneumatic circuitry is located underneath the tabletop.

The German Excel comes with three gas supply modules: O_2, N_2O, and Air/reserve O_2. The Air/reserve O_2 supply has a pipeline air connection and a reserve O_2 cylinder regulator. A check valve and a lower primary regulator output help ensure that the reserve O_2 supply will only be used after other, higher pressure supplies fail.

A typical gas supply module contains two parallel branches, pipeline and cylinder. The pipeline branch has a filtered pipeline connection and a pipeline pressure gauge. The cylinder branch has a filtered cylinder connection, a cylinder gauge, and the primary regulator. Yoke plugs are required to help prevent leaks when cylinders are not connected.

Always close cylinder valves when pipeline supplies are connected. If pipeline and cylinder pressures equalize, both supplies may be used simultaneously, leaving no reserve supply. A pressure relief valve in each gas supply module limits the maximum supply pressure.

O_2 and air flow directly to the power outlets to provide drive gas for pneumatic accessories.

A shutoff valve and the Air/N_2O selector switch control the flow of N_2O to the flow control valve. The N_2O shutoff valve is opened by pressure at a control port. When the system master switch is set to "OFF" the valve is closed. When the system master switch is set to "ON," O_2 pressure is routed to the Air/N_2O selector switch. If the Air/N_2O selector switch is set to "N_2O," pilot O_2 pressure opens the N_2O shutoff valve. As long as the control pressure remains above the minimum level, the N_2O shutoff valve remains open. If pressure drops below this level, the N_2O shutoff valve closes, stopping flow.

Air does not have a shutoff valve. Instead, it flows from the gas supply module, through the system master and the Air/N_2O selector switches to the flow control needle valves. This allows air flow to continue at the selected rate during an O_2 supply failure.

You should see O_2 flow through the O_2 flowtube whenever the system master switch is "ON," even if the O_2 flow control is turned completely clockwise (minimum flow).

Secondary regulators reduce the O_2 and N_2O pressures to the levels required by the flow controls. Air flows directly from the Air/N_2O selector switch to the flow control. A chain linkage on the N_2O and O_2 flow control knobs helps

maintain the minimum O_2 concentration at a nominal 25% for N_2O and O_2 mixtures. A system of mechanical stops limits the maximum and minimum flows.

The mixed gas output of the flowmeter assembly goes through the selected vaporizer to the common gas outlet and into the patient circuit. A pressure relief valve on the common gas outlet limits the maximum outlet pressure.

Pressing the "Flush" button delivers high flows of O_2 directly to the common gas outlet regardless of the position of the system master switch.

The same pilot pressure that opens the N_2O shutoff valve pressurizes the alarm canister. The alarm regulator keeps the O_2 in the canister as long as supply pressure exceeds the alarm threshold. If the O_2 supply pressure falls below this level, gas exits the canister through the alarm regulator to a flow regulator and a reed alarm.

German 210 Excel

Key to Subassembly Abbreviations

CGO	Common Gas Outlet
CYL	Cylinder Yoke
GSM	Gas Supply Module (O_2, N_2O, and Air/O_2)
FM	Flowmeter
PA	Pneumatic Alarm (triggers at 207±21 kPa)
PL	Pipeline Connection (nominal 500 kPa)
PO	Power Outlets (O_2 and Air)
VM	Vaporizer Manifold

Key to Numbered Components

1. Pipeline Pressure Gauge
2. Regulators
   a. Primary Regulator (O_2, N_2O 380 to 414 kPa; reserve O_2 311 to 345 kPa)
   b. Alarm Regulator (Sets pneumatic alarm threshold)
   c. Flow Regulator (Sets pneumatic alarm duration at 7 sec minimum)
   d. Secondary Regulator (262±3.5 kPa for N_2O; 143±26 kPa for O_2 at 2 L/min)
3. Cylinder Pressure Gauge
4. Pressure Relief Valves
   a. 690 kPa
   b. 27.6 to 38.0 kPa at 200 mL/min
5. Switches
   a. System Master Switch (Current Style)
   b. Air/N_2O Switch
   c. Vaporizer Selector Switch
6. Alarm Reservoir
7. Whistle
8. Shutoff Valve (O_2 pressure > 138 kPa opens valve)
9. Secondary Regulator Test Points
10. Flow Control Needle Valves
    (Maximum flows: O_2 10 - 14 L/min; N_2O 10 - 12 L/min; Air 15 - 17 L/min)
    (Minimum flows: O_2 175 to 225 mL/min; all other gases, 0 L/min)
11. Flowtube Assembly
12. Anesthetic Vaporizer
13. Flush Button/Valve (35 to 90 L/min O_2 flush flow)

Key to Unnumbered Symbols

- Filter
- Check Valve
- Gas Circuit Fitting
- Gas Circuit Connection
- Direction of Gas Flow

AA.45.015

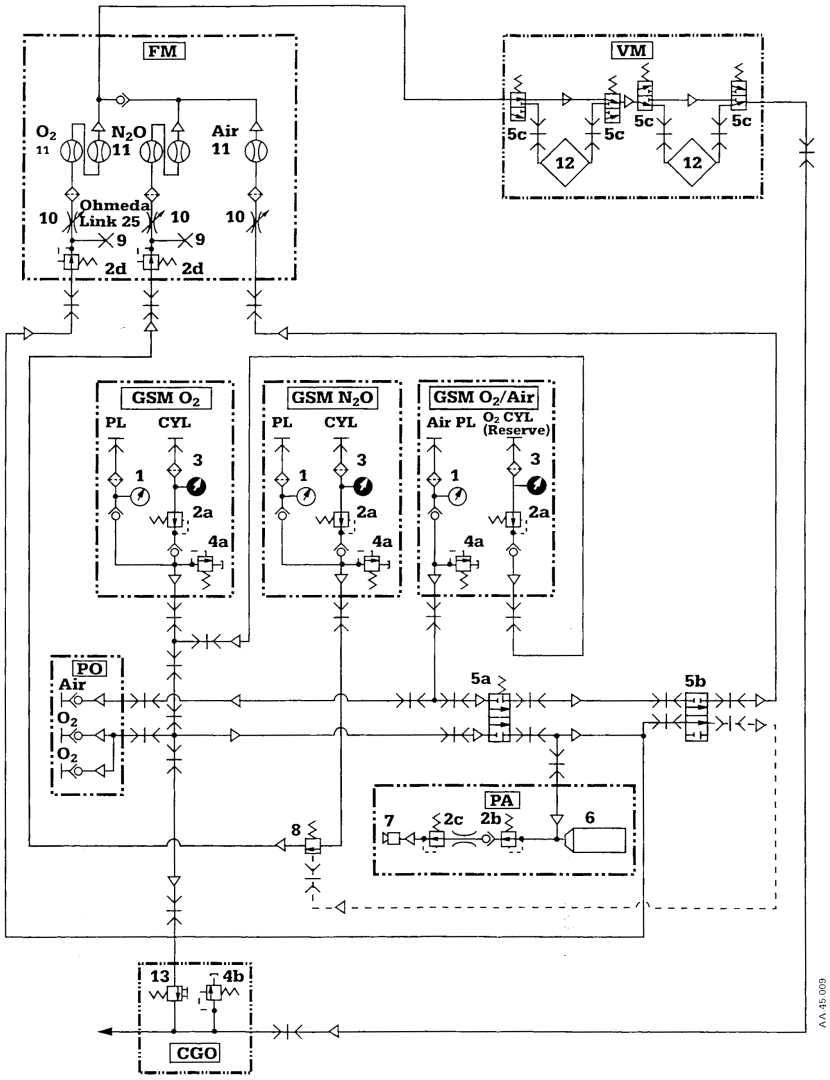

AA.45.009

Figure 2-5 German 210 Excel

D. French Excel

Important: The French Excel has a dual port common gas outlet, a link system that maintains the minimum O_2 concentration at a nominal 30% O_2 (different N_2O secondary regulator settings, and O_2 and N_2O needle valves); and a standard Air/N_2O selector switch.

The Excel Gas Machine consists of the gas supply modules, the flowtubes and controls responsible for gas concentration, the vaporizer assemblies, and specialized alarm and "ON" /"OFF" functions provided by the O_2 supply. Most of the pneumatic circuitry is located underneath the tabletop.

The French Excel has air, N_2O and O_2 gas supply modules. The O_2 gas supply module has both pipeline and cylinder connections. The N_2O and air supplies have pipeline connections.

The O_2 gas supply module contains two parallel branches, pipeline and cylinder. The pipeline branch has a filtered pipeline connection and a pipeline pressure gauge. The cylinder branch has a filtered cylinder connection, a cylinder gauge, and the primary regulator. Yoke plugs are required to help prevent leaks when cylinders are not connected.

Always close cylinder valves when pipeline supplies are connected. If pipeline and cylinder pressures equalize, both supplies may be used simultaneously, leaving no reserve supply. A pressure relief valve in each gas supply module limits the maximum supply pressure.

O_2 and, if present, air flow directly to the power outlets to provide drive gas for pneumatic accessories.

Shutoff valves and the Air/N_2O selector switch control the flow of N_2O and Air to the flow control valves. The shutoff valves are opened by O_2 pressure at a control port. When the system master switch is set to "OFF" the valves are closed. When the system master switch is set to "ON," pilot O_2 pressure routed through the Air/N_2O selector switch opens the selected shutoff valve.

As long as the O_2 control pressure remains above the minimum level, the shutoff valves remain open. If pressure drops below this level, the shutoff valves close, stopping flow.

You should see O_2 flow through the O_2 flowtube whenever the system master switch is "ON," even if the O_2 flow control is turned completely clockwise (minimum flow).

Secondary regulators reduce the O_2 and N_2O pressures to the levels required by the flow controls. Air flows directly from the shutoff valve to the flow control. A chain linkage on the N_2O and O_2 flow control knobs helps maintain the minimum O_2 concentration at a nominal 30% for N_2O and O_2 mixtures. A system of mechanical stops limits the maximum and minimum flows.

2/Theory of Operation

The mixed gas output of the flowmeter assembly goes through the selected vaporizer to the dual port common gas outlet, and into the patient circuit through the selected port. The port selector switch on the bottom of the common gas outlet moves a valve to open the selected port. Moving the switch underneath a port opens that port and seals off the other. An O_2 sampling nipple on the side of the Excel allows you to monitor O_2 concentration in the auxiliary (manual) circuit.

A pressure relief valve on the common gas outlet limits the maximum outlet pressure.

Pressing the "Flush" button delivers high flows of O_2 directly to the common gas outlet regardless of the position of the system master switch.

The same pilot pressure that opens the shutoff valves pressurizes the alarm canister. The alarm regulator keeps the O_2 in the canister as long as supply pressure exceeds the alarm threshold. If the O_2 supply pressure falls below this level, gas exits the canister through the alarm regulator to a flow regulator and a reed alarm.

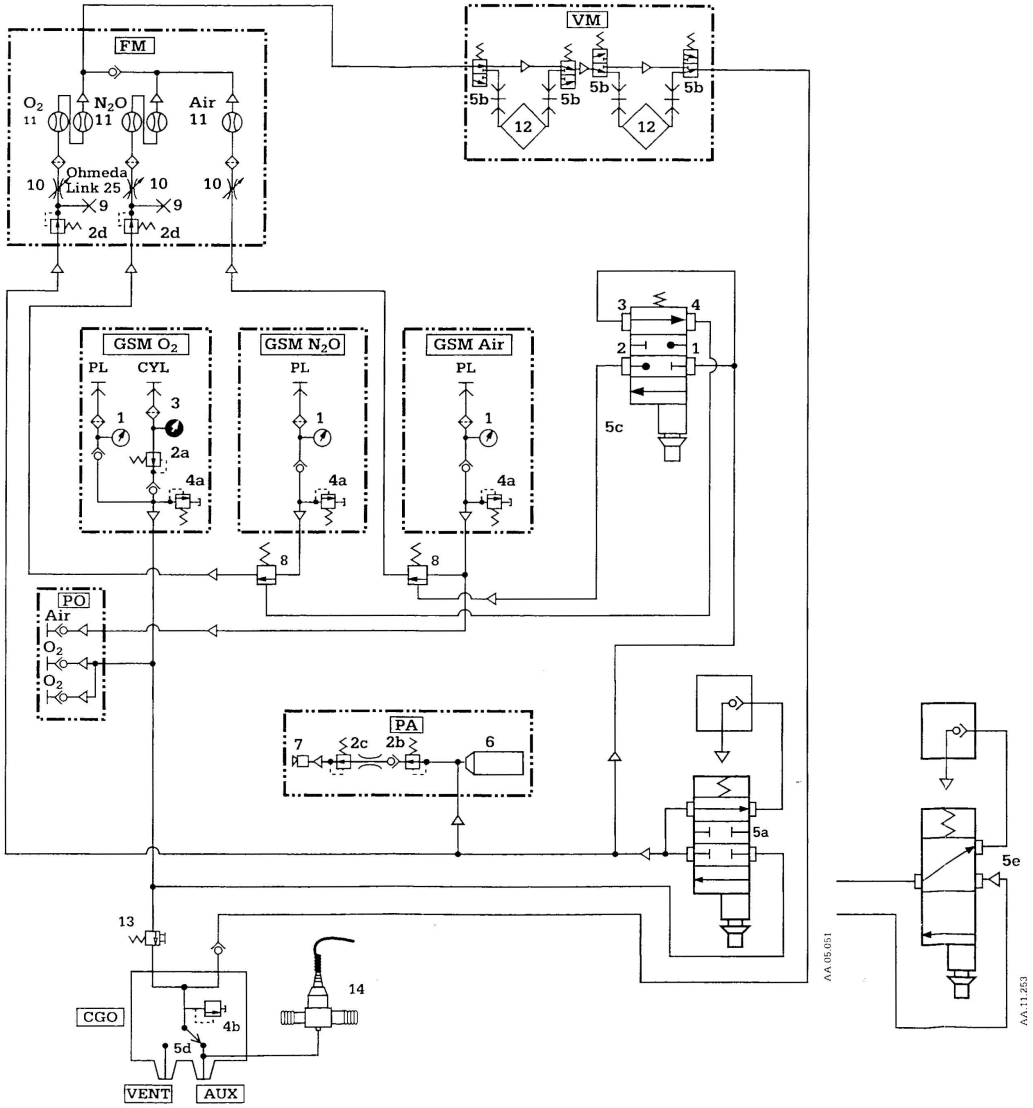

French 210 Excel

Key to Subassembly Abbreviations

AUX	Manual Circuit Connection
CGO	Common Gas Outlet
CYL	Cylinder Yoke
GSM	Gas Supply Module (O_2, N_2O, and Air)
VENT	Ventilator Circuit Connection
FM	Flowmeter
PA	Pneumatic Alarm (triggers at 207±21 kPa)
PL	Pipeline Connection (nominal 345 kPa)
PO	Power Outlets (O_2 and Air)
VM	Vaporizer Manifold

Key to Numbered Components

1. Pipeline Pressure Gauge
2. Regulators
   a. Primary Regulator (O_2 311 to 345 kPa)
   b. Alarm Regulator (Sets pneumatic alarm threshold)
   c. Flow Regulator (Sets pneumatic alarm duration at 7 sec minimum)
   d. Secondary Regulator (193 to 207 kPa for N_2O; 143 to 169 kPa for O_2 at 2 L/min)
3. Cylinder Pressure Gauge
4. Pressure Relief Valves
   a. 690 kPa
   b. 27.6 to 38.0 kPa at 200 mL/min
5. Switches
   a. System Master Switch (Current style)
   b. Vaporizer Selector Switch
   c. Air/N_2O Selector Switch
   d. Port Selector Switch (Ventilator or Auxiliary Outlet)
   e. System Master Switch (Older style)
6. Alarm Reservoir
7. Whistle
8. Shutoff Valve (O_2 pressure > 138 kPa opens valve)
9. Secondary Regulator Test Points
10. Flow Control Needle Valves
    (Maximum flows: O_2 15 - 17 L/min; N_2O 10 - 12 L/min; Air 15 - 17 L/min
    (Minimum flows: O_2 175 to 225 mL/min; all other gases, 0 L/min)
11. Flowtube Assembly
12. Anesthetic Vaporizer
13. Flush Button/Valve (35 to 70 L/min)
14. O_2 Sampling Connection

Key to Unnumbered Symbols

- Filter
- Check Valve
- Gas Circuit Fitting
- Gas Circuit Connection
- Direction of Gas Flow

AA.05.050

Figure 2-6 French 210 Excel

2.2 Pneumatic Components

This section provides detailed information about:

- How certain pneumatic components work (for example the link proportion limiting control system)
- The national variations listed in Section 1.2, Summary of Excel Models (for example, what is the difference between a French and a standard ISO flowmeter assembly).

The major pneumatic components covered in this section are:

Gas supply modules
System master switch
N_2O and additional (air and/or CO_2) shutoff valves
Air/N_2O selector switch (some models)
Flow control assembly (includes Ohmeda Link Proportion Limiting Control System)
Vaporizer manifold and vaporizers
Common gas outlet
Air entrainment valve (some models)
Low O_2 pressure alarm
Pneumatic power outlet
Flush valve
Exhaust block

Tubing diameters and thread sizes are as follows.

Gas Fitting	Accepts Tube Dia.	If Threaded
Air	8 mm	M11x1
CO_2	4 mm	M5x0.8
O_2	6 mm	RS 1/8
N_2O	5 mm	RS 1/4
Mixed gas	1/4 in	1/8 NPT

A. Gas Supply Modules

⚠WARNING: Always close the cylinder valve when you are using a pipeline supply. If a cylinder valve is open and the pipeline and regulated cylinder pressures are equal, both supplies may be used simultaneously, leaving an insufficient reserve in case of pipeline failure.

Gas supply modules are labeled with the name of the appropriate gas. Color codes varies with national standards.

Gas enters the pneumatic circuitry through the gas supply module. A typical cylinder/pipeline gas supply module consists of:

- An indexed pipeline fitting with a filter to remove debris and a pipeline check valve to prevent back flow from the cylinder supply. Five different indexing standards are used: NIST; DIN (Germany), DISS Male (Switzerland); Australian Standard; Air Liquide (France); and Spri (Scandinavia).

- A pressure gauge for each pipeline supply. Nominal pipeline pressure varies with nationality.

- A gas cylinder connection with a cylinder check valve to prevent flow from the cylinder when pipeline pressure is being used and a filter to remove debris. All units except Austrian Excels and German Excels (DIN 470) use a yoke and tee handle to attach the cylinder and pin indexing to make the blocks gas specific; only an O_2 cylinder mates to an O_2 yoke, etc.

  Note: Always replace the cylinder gasket when replacing cylinders. Always install a yoke plug and gasket in any empty hanger yokes.

- A pressure gauge for each gas cylinder. The scale depends on the gas.

- A primary pressure regulator. Again the setting varies with nationality.

- A pressure relief valve that limits gas supply output to 690 kPa (100 psig). Conditions that may open the relief valve include an incorrectly adjusted or leaking regulator or a pipeline pressure that is too high.

National Variations (pipeline is abbreviated pl; cylinder is abbreviated cyl):

Country	Gases	Pipeline/Cylinder Pressure	Pipeline/Cylinder Fittings	Color Code
Australia-210	O_2 cyl/pl N_2O cyl/pl Air cyl/pl	pl: 345kPa (50 psig) cyl: 311-345 kPa (45-50 psig)	pl: Australian std cyl: Pin indexed yoke	Air BLK/WHT N_2O Blue O_2 White
Austria-210	O_2 cyl/pl N_2O cyl/pl Air cyl/pl	pl: 414kPa (60 psig) cyl: 380-414 kPa (55-60 psig)	pl: NIST cyl: DIN	Air Gray N_2O Yellow O_2 Blue
France-210	O_2 cyl/pl N_2O pl only Air pl only	pl: 345kPa (50 psig) cyl: 311-345 kPa (45-50 psig)	pl: Air Liquide cyl: Pin indexed yoke	Air BLK/WHT N_2O Blue O_2 White
German 210	O_2 cyl/pl N_2O cyl/pl O_2 cyl/Air pl	Normal pl: 500 kPa (73 psig) cyl: 380-414 kPa (55-60 psig) Reserve O_2 cyl: 311-345 kPa (45-50 psig)	pl: DIN cyl: Pin indexed yoke Reserve O_2 cyl: DIN	Air Yellow N_2O Gray O_2 Blue
ISO-110	O_2 pl only N_2O pl only	414 kPa (60 psig) pl only	pl: NIST	N_2O Blue O_2 White
ISO-410 & 210	O_2 cyl/pl O_2 cyl only N_2O cyl/pl N_2O cyl only Air cyl/pl CO_2 cyl only	pl: 414kPa (60 psig) cyl: 380-414 kPa (55-60 psig) CO_2 cyl: 207 kPa (30 psig)	pl: NIST cyl: Pin indexed yoke	Air BLK/WHT N_2O Blue O_2 White CO_2 Gray
Italy 110/210	O_2 pl only N_2O pl only Air pl only	414 kPa (60 psig) pl only	pl: NIST	Air BLK/WHT N_2O Blue O_2 White
Scandinavia 210	O_2 cyl/pl N_2O cyl/pl Air cyl/pl	pl: 414kPa (60 psig) cyl: 380-414 kPa (55-60 psig)	pl: Spri cyl: Pin indexed yoke	Air BLK/WHT N_2O Blue O_2 White
Spain-110/210	O_2 pl only N_2O pl only Air pl only	414 kPa (60 psig) pl only	pl: NIST	Air BLK/WHT N_2O Blue O_2 White
Switzerland - 210	O_2 cyl/pl N_2O cyl/pl Air cyl/pl	pl: 414kPa (60 psig) cyl: 380-414 kPa (55-60 psig)	pl: DISS Male/ cyl: Pin indexed yoke	Air Brown N_2O Green O_2 Blue

* The combined Air (pipeline) and O_2 (reserve cylinder) gas supply used on the German Excel has different pressure regulator output and fittings than the other German Excel gas supplies.

B. System Master Switch

The system master switch controls pilot O_2 pressure. On Excels with an integral ventilator (7800 or 7750) the system master switch also interacts with the ventilator, switching the 7800 "ON" and "OFF," or triggering an alarm if the 7750 is switched "OFF" while the Excel is "ON."

Figures in Section 2.1 show both the old and the new version of the switch when applicable. Note the different pneumatic connections for both styles.

Note: The O_2 power outlet and flush valve are completely independent of the system master switch.

National Variations:

On German Excels, both air and O_2 supplies are routed through the system master switch. In the "OFF" position, the switch vents the downstream circuit to the atmosphere for both gases (Figure 2-5).

C. Shutoff Valve(s)

Shutoff valves stop N_2O, CO_2, or air from entering the flowtubes unless adequate O_2 pressure is available. The O_2 pressure must reach 138 kPa (20 psig) for the valve to open. This pressure is supplied through the system master switch and the Air/N_2O selector switch (not present on all models).

Note: Two gas Excels have only a N_2O shutoff valve.

National Variations
German Excels do not have an air shutoff valve. In the event of an O_2 supply failure, air flow continues at the selected rate (float does not fall to zero) if the Air/N_2O selector switch is set to air.

D. Air/N_2O Selector Switch

On some 210 Excels, an Air/N_2O selector switch determines which shutoff valve will be opened. When the switch is set to N_2O, the switch routes pilot O_2 pressure to the control port of the N_2O shutoff valve. When the switch is set to air, the switch routes pilot O_2 pressure to the control port of the air shutoff valve.

The following countries use Air/N_2O selector switches:

- France-210 Excel (ISO style; Figure 2-6)
- Scandinavia- 210 Excel (ISO style; Figure 2-4)
- Spain- 210 Excel (ISO style; Figure 2-3)
- Switzerland - 210 Excel (ISO style; Figure 2-3)
- Germany - 210 Excel (German style; Figure 2-5)

National Variations
The German Air/N_2O selector switch is unique. Because there is no air shutoff valve, both air and O_2 are routed through the switch. Setting the switch to air, supplies air from the system master switch directly to the flow control needle valves.

E. Flow Control Assembly

1. General Overview

Note: The flow control settings used by French Excels are different from the standard settings listed below. Please refer to the section "National Variations."

The flow control assembly consists of:

- **Secondary O_2 and N_2O regulators:** These regulators reduce gas pressures to the levels required by the Link Proportion Limiting Control System: 262.2±3.5 kPa (38 ± 0.5 psig) at 2 L/min flow for N_2O; and 143.2 ± 25.9 kPa (20.75±3.75 psig) at 2 L/min for O_2. Use of secondary regulators also minimizes float fluctuation from upstream pressure changes.

- **Flow control needle valves/Link Proportion Limiting System** (one for each gas): These valves adjust gas flows. A chain linkage between the N_2O and the O_2 flow control knobs helps maintain the minimum O_2 concentration at a nominal 25% for N_2O and O_2 mixtures. Mechanical stops limit the minimum flows to 200 ± 25 mL/min for O_2 and 0 mL/min for all other gases.

- **Flowmeter module:** Flowtubes let you read gas flow rates. Filters at the entrance of each tube remove debris from the gas stream. Flowtube labeling, calibration, and fittings are gas specific and vary with nationality (Section 1.2, Summary of Excel Models). The inside of the flowtubes have an anti-static coating to prevent the float from sticking.

  Note: Always read flowtubes directly across from the top edge of the float.

- **The gas distribution manifold:** Flowmeter output merges at the top of the gas distribution manifold. O_2 is delivered downstream of all other gases with a check valve between O_2 and the other gases to prevent O_2 back flow into the other tubes.

⚠WARNING: The Link Proportion Limiting Control System sets a minimum O_2 concentration in the fresh gas stream when only O_2 and N_2O are used. Recirculating through an absorber or using an additional gas may still cause a hypoxic mixture to be delivered, especially at low O_2 flow rates.

⚠WARNING: Ohmeda strongly recommends the use of oxygen monitoring with every use of this machine.

⚠**CAUTION: Sudden surges can damage the flow control assembly. Check that all flow controls are fully clockwise (minimum flow or "OFF") before setting the system master switch to "ON."**

National Variations

Note: The French Excel uses different N_2O and O_2 needle valves than other Excels. Always check that you order the French needle valves for repair purposes.

The French Link Proportion Limiting System meets different specifications:

- Secondary O_2 Regulator output: 156 ±13 kPa at 2 L/min
- Secondary N_2O regulator output: 193 to 207 kPa at 2 L/min
- Maximum O_2 flowrate: 16±1 L/min
- Nominal O_2 concentration: 30%

Austrian Excels add a cap to the O_2 flow control so that the shape is different than the O_2 flow control on all other Excels. Austrian standards require this cap.

2. How the Link Proportion Limiting System Works

A variety of mechanical stops and a linkage system determine minimum flows, relative N_2O and O_2 flows, and maximum flows.

Minimum Flows:
A stop screw inside each flow control and a stop on the valve body set the minimum flows. Minimum flow occurs when the body stop and the stop screw prevent you from turning the flow control clockwise. The height of the stop screw is adjustable. The stop screw is set for maximum contact with the body stop. This means that when you rotate the flow control one turn counter-clockwise and the valve stem moves out, the stop screw just clears the body stop.

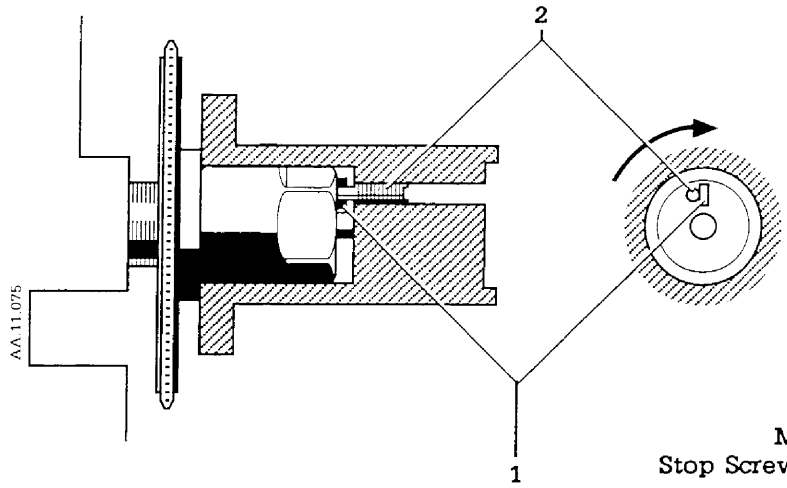

1. Body Stop
2. Stop Screw

Minimum Flow
Stop Screw Contacts Body Stop

Figure 2-7 Minimum stops

Kick-In Point:
The kick-in point is defined as the N_2O flow at which the link system engages the O_2 flow control when the O_2 flow control is set for minimum flow. Because the kick-in point adjusts link system tracking at low O_2 flows, the nominal kick-in point, 500 mL/min of N_2O, can vary significantly between Excel systems.

Link System:
The link system helps maintain the minimum O_2 concentration at a nominal 25% for N_2O and O_2 mixtures (30% on French units). The linkage consists of a chain that connects a sprocket on the N_2O flow control to a sprocket on the O_2 flow control. A stop screw on the collar of the O_2 flow control knob engages and disengages the linkage.

When the N_2O flow is below the kick-in point, the link system is not engaged and increasing the N_2O flow turns the O_2 sprocket without changing the O_2 flow. At the kick-in point, the tab on the O_2 sprocket catches the stop screw on the collar of the O_2 flow control. This engages the link system. Once the link system is engaged, turning the N_2O flow control counter-clockwise (increase flow) also increases the O_2 flow to maintain the minimum O_2 concentration.

The link system disengages when you decrease the N_2O flow or increase the O_2 flow. Decreasing the N_2O flow rotates the tab on the O_2 sprocket away from the stop screw on the collar. Increasing the O_2 flow rotates the stop screw away from the tab. Either action increases the O_2 concentration above the minimum percentage. Sufficiently decreasing the O_2 or increasing the N_2O flow brings the tab and the stop screw back into contact and again engages the link system.

The O_2 knob and collar are attached to the valve stem. Increasing the O_2 flow moves the valve stem out, away from the O_2 sprocket. The stop screw must clear the tab after one turn. If the stop screw were to catch on the other side of the tab, incorrect proportioning could result.

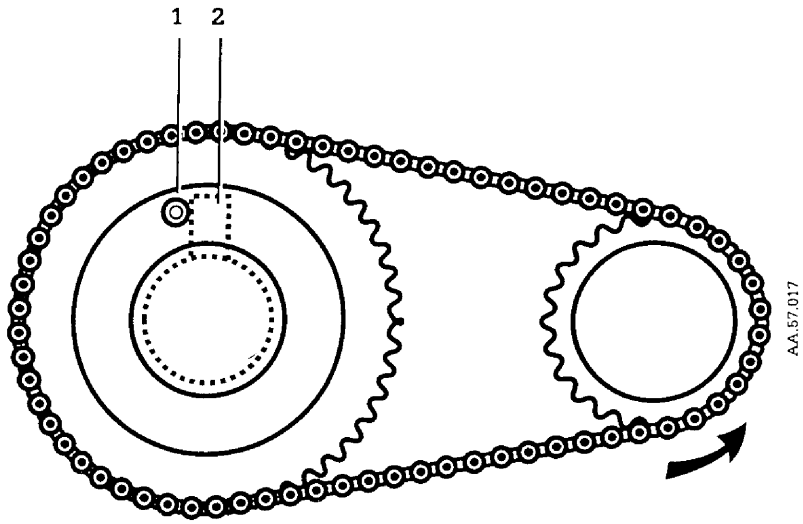

1. Collar Stop Screw
2. Tab

Increase N_2O

Figure 2-8 Engaging the linkage

Maximum N_2O flow:
Turning the N_2O flow control counter-clockwise (increasing flow) also moves the O_2 sprocket forward. The maximum N_2O flow occurs when the O_2 sprocket hits the shoulder on the O_2 valve. There should be between four and a half to five and a half N_2O flow control rotations between the minimum and the maximum flow.

Maximum O_2 flow:
A stop inside the needle valve and the output of the secondary O_2 regulator set the maximum O_2 flow. The needle valve stop is fixed, but the regulator is adjustable. Secondary O_2 regulator adjustment adjusts N_2O/O_2 tracking at high O_2 flows, and sets the maximum O_2 flow.

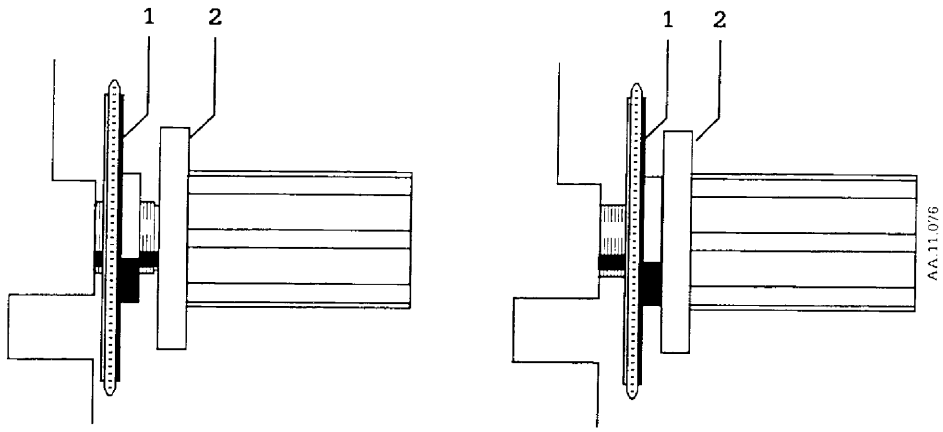

O_2 Sprocket at Minimum N_2O Flow
1. O_2 Sprocket
2. O_2 Needle Valve

O_2 Sprocket Contacts Valve at Maximum N_2O Flow

Figure 2-9 Maximum N_2O flow

Maximum additional gas (air or CO_2) flow:
A stop ring and a stop collar set the maximum additional gas flow. At maximum flow, the stop hits the tab on the stop ring and prevents you from turning the knob counter-clockwise. As you decrease the flow, the valve stem moves in and the stop clears the tab.

Note: Air and CO_2 use the same needle valves.

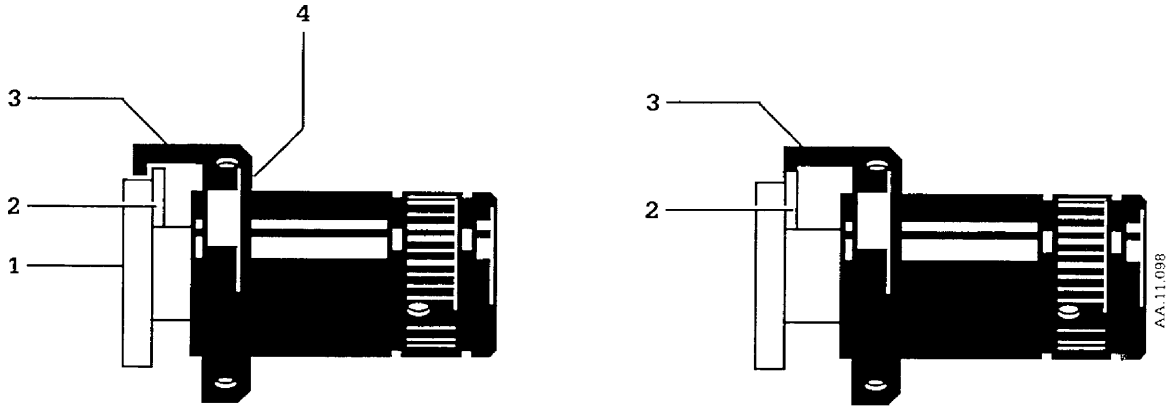

Below Maximum Flow
1. Stop Ring
2. Tab
3. Stop Collar

Maximum Flow
Tab Contacts Stop

Figure 2-10 Maximum additional gas flow

F. Vaporizer Manifold, Selectatec Series Manifold

Gas flows from the flowmeter module to the vaporizer manifold. The flow enters a vaporizer to pick up anesthetic only if the vaporizer is switched "ON."

The vaporizer manifold holds one to three continuous flow vaporizers depending on the Excel model. Vaporizers attach to port valve cartridges. Locking levers secure the vaporizers to the manifold. When vaporizers are correctly mounted, interlock rods (part of the vaporizer) prevent you from turning on more than one vaporizer at a time.

National Variations:

The Scandinavian vaporizer manifold holds only one vaporizer.

G. Common Gas Outlet

The mixed gas and any anesthetic selected flows from the vaporizer manifold to the common gas outlet.

The common gas outlet is located below the flush button. The common gas outlet also contains a relief valve to limit outlet pressure and a check valve to prevent back flow. The style of common gas outlet depends on nationality and the Excel Model (410, 210, 110).

National Variations:

There are five different common gas outlets:

- Left Fixed (Australian; ISO 110 Excel; Italian Excels): The left fixed common gas outlet has a bayonet style outlet and a built in check valve to prevent back flow from the patient circuit. Unlike the swivel and dual common gas outlets, the check valve housing cannot be replaced as a separate component.

- Tapered ISO (German and Scandinavian Excels): The tapered ISO common gas outlet is similar to the left fixed outlet with a tapered, ISO style outlet and no check valve.

- Left Swivel (ISO 210 Excel and 410; Austrian, Spanish, and Swiss Excels) and Right Swivel (ISO 210 Excel and 410): The left and right swivel common gas outlets use a tapered ISO style outlet that pivots on two swivel washers and a separate check valve housing. The swivel style common gas outlets also incorporate air entrainment valves that allow the patient to breathe room air during an O_2 supply failure.

- Dual (French): The dual common gas outlet has two connections. A tapered, ISO style outlet for manual ventilation and a bayonet style

outlet for mechanical ventilation. An O_2 sensing port allows O_2 monitoring during manual ventilation. The selector switch routes gas to the desired outlet. Setting the switch turns a shaft inside the common gas outlet to seal off the other outlet. An electrical switch on the bottom of the common gas outlet tells a 7750 or 7800 Ventilator which outlet has been selected. The check valve and the flush button are discrete external assemblies.

Country	Type	Common Gas Outlet Check Valve^	Valve Air Entrainment
Australia-210	Left Fixed	Internal	No
Austria-210	Left Swivel	External	Yes
ISO-410 & 210	Right or Left Swivel	External	Yes
ISO-110	Left Fixed	Internal	No
France-210	Left Fixed Dual	External	No
German 210	Left Fixed Taper	Not Used	No
Italy-110 & 210	Left Fixed	Internal	No
Scandinavia 210	Left Fixed Taper	Not Used	No
Spain-110 & 210	Left Swivel	External	Yes
Switzerland - 210	Left Swivel	External	Yes

^ The flapper valve can be replaced in all common gas outlets. The check valve housing can only be replaced if it is an external assembly. If the check valve housing is internal (left fixed outlets) the entire common gas outlet must be replaced.

H. Air Entrainment Valve

All swivel style common gas outlets feature an air entrainment valve that allows the patient to breathe spontaneously (10 cm H_2O effort) if the O_2 supply fails.

The air entrainment valve has three parts; an adapter with a built in regulator, a disconnect valve, and an air inlet valve with a whistle alarm.

The same pilot O_2 pressure that opens the shutoff valve is further regulated and applied to the disconnect valve. The pressure pushes against a spring to close the air inlet valve. If the O_2 supply fails, the disconnect valve opens allowing the patient to draw room air into the circuit. As the air enters, it flows over a reed to generate a pneumatic alarm. A check valve in the air inlet prevents reverse flow during exhalation.

I. Low O_2 Pressure Alarm

The low pressure alarm monitors the O_2 supply pressure:

- When the system master switch is "ON", the pilot O_2 line pressurizes the alarm reservoir to the gas supply output pressure.

- As long as O_2 pressure (pipeline or regulated cylinder supply) remains above approximately 207 kPa (30 psig); range: 186 to 228 kPa (27 to 33 psig), the alarm regulator prevents O_2 from flowing to the reed alarm.
- When the O_2 supply falls below the threshold, the canister vents to the reed alarm though a flow control regulator, which limits flow to maintain the alarm for at least seven seconds.
- The alarm stops when the reservoir is empty.

National Variations:

Australian Excels have a pneumatic indicator next to the system master switch. The indicator consists of a clear window with a two color bobbin. Normally the O_2 supply pressure hold the black side of the bobbin against the window. When the O_2 supply pressure falls to the alarm level, the bobbin flips and the red side appears next to the window.

J. Pneumatic Power Outlet

The pneumatic power outlet provides drive gas, either O_2 or air, for the ventilator or other pneumatic accessories. Gas delivered to the fitting comes directly from the cylinder or pipeline supply regardless of the position of the system master switch. Excels equipped with air have both air and O_2 power outlets. Excels without air, have O_2 power outlets. The style of outlet varies with nationality. All outlets have an internal check valve to prevent flow when nothing is connected to the fitting.

Note: Ventilator drive gas may vary with nationality. Conversion kits may be available to change from one drive gas to another. Refer to the ventilator service manual.

National Variations:

Country	Model Excel	Outlets Number/Gas	Number of outlet blocks	Outlet Type
France, ISO, Spain, Italy, German, Austrian, Australia, Swiss	Air outlet only present if Excel has Air gas supply module	Two O_2 One Air	1	Mini-Schrader
Scandinavian	All	One O_2 One Air	2 (left and right)	Scandinavian

K. O_2 Flush Valve

Pressing the flush button delivers a high flow of O_2 to the common gas outlet through the flush valve. The O_2 comes directly from the cylinder or pipeline supply regardless of the position of the system master switch.

National Variations:

On French Excels, the flush button is a separate assembly, not part of the common gas outlet. However, the internal operation of the flush valve is identical to other Excels.

Flows also depends on supply pressure, which varies with nationality:

Nationality	Pipeline Pressure	Flush Flow
German	500 kPa (73 psig)	35 to 90 L/min
All others	345 or 414 kPa (50 or 60 psig)	35 to 70 L/min

L. Exhaust Block

An exhaust block vents the system master switch to the atmosphere in the "OFF" position.

National Variations:

There are two types of Exhaust blocks:

- One contains a check valve to allow negative low pressure leak checks at the common gas outlet.
- The other has no check valve. This allows a negative pressure low pressure leak test through the exhaust block fitting.
- German Excels do not have an exhaust block.

Note: Running a positive pressure leak check followed by a negative pressure low pressure leak check on the exhaust block tells you if there is a leak in the

common gas outlet. If the positive pressure test fails, but the negative pressure test passes, the leak is in the common gas outlet (the only portion of the low pressure circuitry not tested by a negative pressure leak test on the exhaust block).

Country	Exhaust Block Style	Type of Leak Testing
Australia-210	Check Valve	Positive or negative pressure at common gas outlet
Austria-210	No Check Valve	Positive pressure at common gas outlet Negative pressure at exhaust block
France-210	Check Valve	Positive or negative pressure at common gas outlet. Test twice, once with the auxiliary outlet selected on the dual common gas outlet, and once with the ventilator outlet selected.
German 210	No Exhaust Block	Positive pressure at common gas outlet.
ISO-110	Check Valve	Positive or negative pressure at common gas outlet
ISO-410 & 210	No Check Valve	Positive pressure at common gas outlet Negative pressure at exhaust block
Italy 110/210	Check Valve	Positive or negative pressure at common gas outlet
Scandinavia 210	Check Valve	Positive or negative pressure at common gas outlet
Spain-110/210	No Check Valve	Positive pressure at common gas outlet Negative pressure at exhaust block
Switzerland - 210	No Check Valve	Positive pressure at common gas outlet Negative pressure at exhaust block

2.3 Power Outlet Box (Accessory)

The power outlet box on the rear of the Excel distributes power to the auxiliary outlets. The isolation transformer in the power outlet box generates a fused supply for the light package.

Figure 2-11 shows the power outlet box circuitry. Figure 2-12 shows the actual component location. The reset button for the 10 A circuit breaker is located on the front of the box.

Numbers
1. Power Cord
2. German Outlet Box
3. Light Package Power
4. 7800 Ventilator
5. 5250 Respiratory Gas Monitor
6. Light Package

Abbreviations
L Mains, Line Voltage
N Neutral
G Ground
SW1 Voltage Selector Switch
RTN Voltage Return

Symbols

Circuit Breakers

Circuit Breakers

Thermal Fuse

Fuse

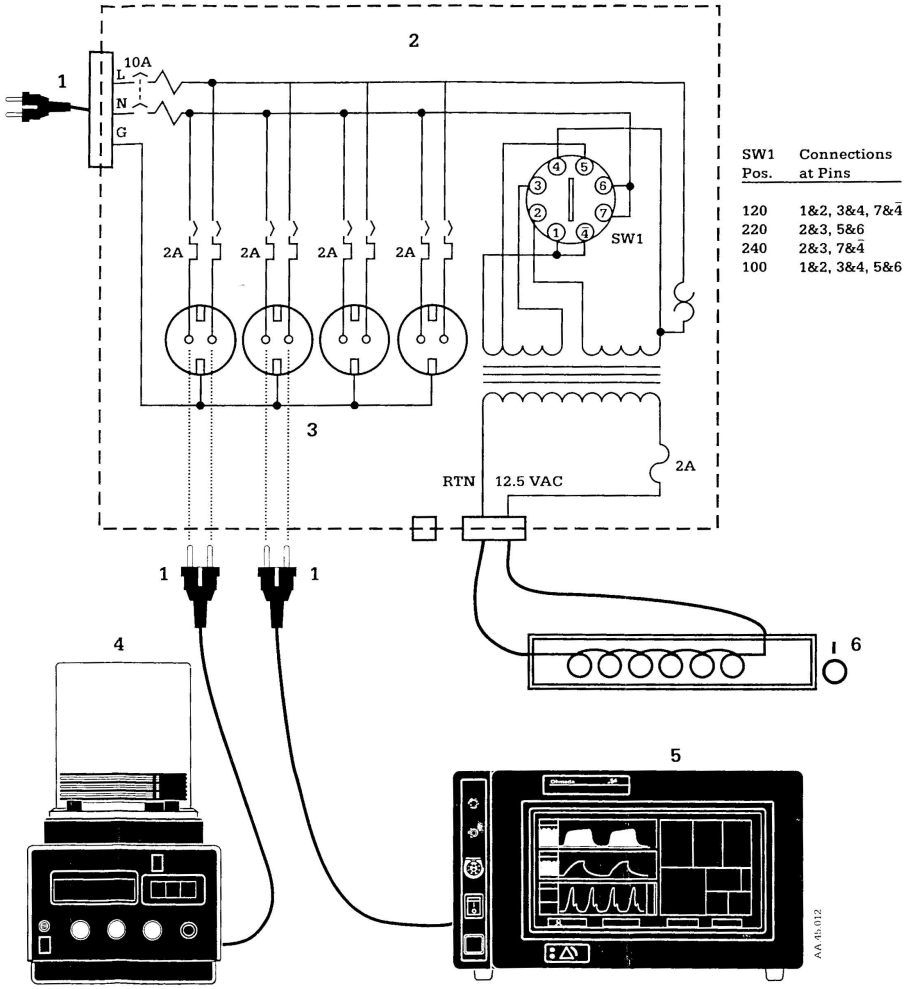

SW1 Pos.	Connections at Pins
120	1&2, 3&4, 7&$\bar{4}$
220	2&3, 5&6
240	2&3, 7&$\bar{4}$
100	1&2, 3&4, 5&6

Figure 2-11 Power outlet box schematic

National Variations:

The IEC power outlet box (English labels) is used in all countries except the United Kingdom (UK), France and Germany.

The UK power outlet box is the same as the standard IEC outlet box except that it comes with a BSI style power cord.

The French power outlet box is the same as the standard IEC outlet box except that it comes with French labels, an extra bracket to help attach the box to the rear of the flowmeter, and an anti disconnect bracket to attach the ventilator power cord to one of the auxiliary outlets.

The German power outlet box has German labels, a TUV approved transformer subassembly, and German style auxiliary power outlets.

2.4 Integral Ventilators (7750 or 7800)

A. General

Figure 2-12 shows signal connections through the Excel system. Sensor signals are connected to the ventilator through an interface panel on the side of the Excel.

The ventilator also utilizes the system master switch:

- The 7800 Ventilator is switched "ON" and "OFF" through the system master switch (COMB).
- The 7750 Ventilator has its own "ON"/"OFF" switch, however a power failure alarm triggers if the ventilator is "OFF" when the Excel is "ON."

B. Use With French Excels (Dual Common Gas Outlet; DCGO)

With a DCGO Excel, an electrical switch on the DCGO indicates which outlet is selected, ventilator or auxiliary. Ventilator response differs between the 7750 and the 7800:

- The 7750 checks for closure between pins 16 and 17 on the Excel interface cable (ventilator port is selected). If the ventilator port is selected, the 7750 enables the mechanical ventilation switch. If the ventilator port is not selected, it disables mechanical ventilation and enters a monitoring mode.
- The 7800 checks for closure between pins 16 and 18 on the Excel interface cable (auxiliary port selected). If the auxiliary port is selected, it enters a monitoring mode. If the auxiliary port is not selected, the French 7800 behaves just like a standalone 7800 ventilator.

Some additional checks are required when using the 7800 with a DCGO:

- Before the auxiliary outlet can be used, you must select the French language. Any other language will trigger a "VENT FAIL 15" alarm when the auxiliary port is selected.
- A "SANS GAS FRAIS" alarm triggers if: mechanical ventilation is not "OFF" when you select the auxiliary port; or the ventilator detects exhaled volume in the mechanical circuit (indicating that the patient is actually connected to ventilator port) while the auxiliary port is selected and mechanical ventilation is "OFF."

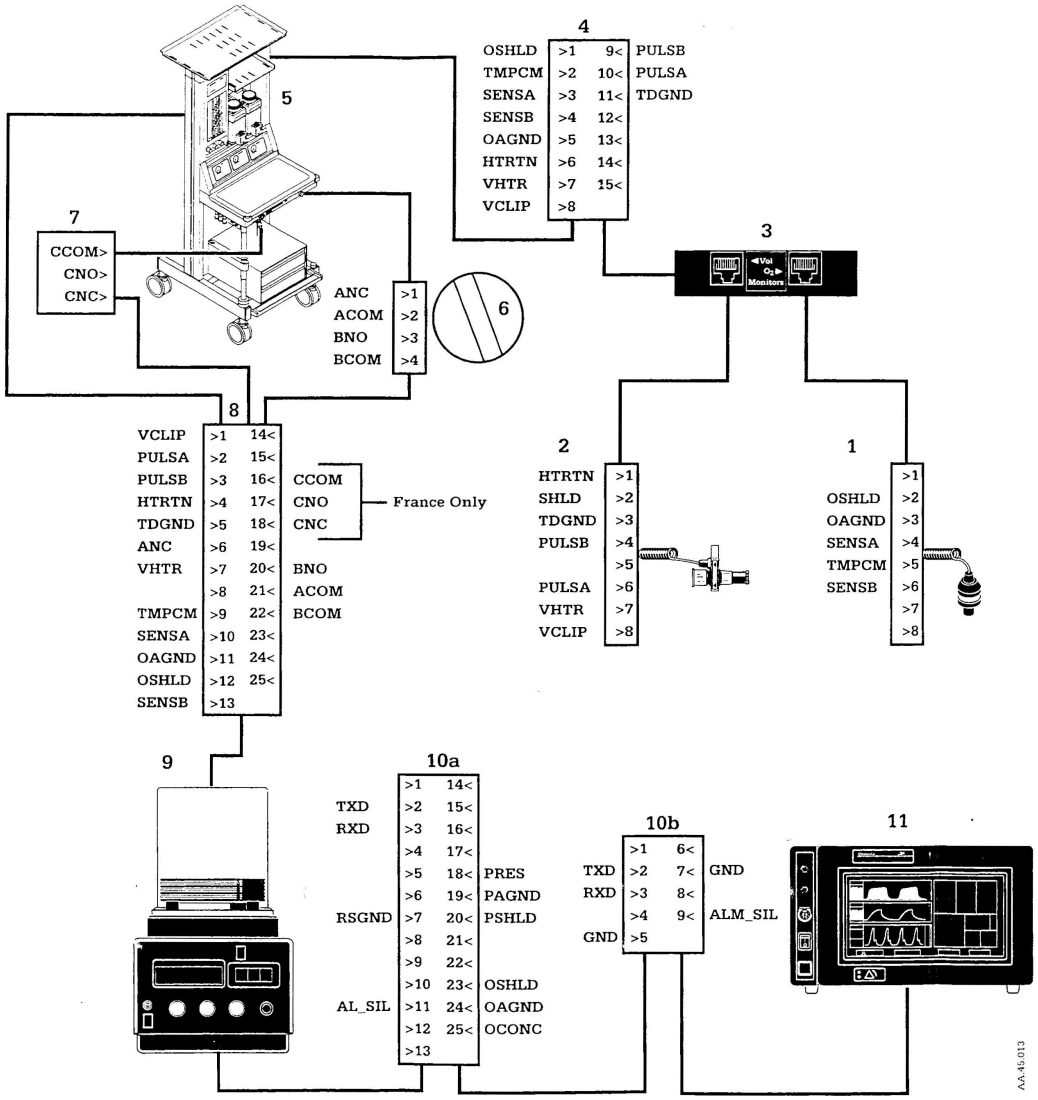

Numbered Components

1. O_2 Sensor
2. Tidal Volume Sensor
3. Patient Interface Connections
4. Cable Connection - Patient Interface to Excel
5. Excel Anesthesia Machine
6. System Master Switch
7. Dual Common Gas Outlet (DCGO) Switch (French Excels Only)
8. Excel/Ventilator Connection
9. Ventilator (the 7800 Ventilator is shown
10. RS232 Connection
    a. Ventilator Connector
    b. 5250 Connector
11. 5250 Respiratory Gas Monitor (RGM)

Connector 1. O_2 Sensor Signals--Routed through the Excel to the Ventilator

Signal	Interpretation	Application
OSHLD	O_2 Sensor Shield	----------
OAGND	O_2 Sensor Analog Ground	----------
SENSA	O_2 Sensor Signal.	Current proportional to O_2 concentration
SENSB	Not Used	----------
TMPCM	Probe Thermistor Signal	Temperature Compensation

Connector 2. Tidal Volume Sensor Signals--Routed through the Excel to the Ventilator

Signal	Interpretation	Application
HTRTN	Return line from heater element	Used to detect presence of tidal volume sensor
SHLD	Shield	----------
TDGND	Digital Ground	----------
PULSEA	Sensor Pulses	Frequency proportional to flow. A leading B is
PULSEB	Sensor Pulses	inspiratory. B leading A is expiratory.
VHTR	Nominal 5 VDC	Sensor Supply
VCLIP	Nominal 5 VDC	Sensor Supply

Connector 6. System Master Switch Signals--Routed through the Excel to the Ventilator

Signal	Interpretation	Application
ANC	Relay A Normally Closed	Not Used
ACOM	Common	
BNO	Relay B Normally Open	Continuity if "ON." Serves as 7800 ON/OFF
BCOM	Common	switch; w/ 7750 indicates gas machine is "ON."

Connector 7. Dual Common Gas Outlet (DCGO) Signals (French Excel Only)- - Routed through the Excel to the Ventilator

Signal	Interpretation	Application
CNC	Relay C Normally Closed; Closure (logic low) = Auxiliary port selected	The 7800 enters the monitoring mode (the French language must be selected on the 7800).
CNO	Relay C Normally Open; Closure (logic low) = Ventilator port selected	The 7750 enables mechanical ventilation
CCOM	Relay C Common	----------

Connector 10. RS-232 Signals--Routed through Excel to 7800

Signal	Interpretation	Application
TXD	Transmit	----------
RXD	Receive	----------
RSGND	RS232 Ground	----------
AL_SIL	Alarm Silence	Logic high indicates ventilator alarm is silenced.
PRES	Analog Pressure	Linear 0-1 Vdc; -20 to 120 cm H_2O
PAGND	Analog Pressure Ground	----------
PSHLD	Analog Pressure Shield	----------
OCONC	Analog O_2 Concentration	0-1Vdc; 0 to 100%

Figure 2-12 Excel system signal routing

3/Check-Out Procedures

⚠WARNING: After any repair or service of the gas machine or system components, complete Section 3.1, Gas Machine Tests, and Section 3.2, System Check-Out.

3.1 Gas Machine Tests

The tray top must be installed before starting this procedure. Installing the tray top may shift the tubing slightly.

The flowmeter shield and rear panel and the gas supply cover may be off to allow easier adjustments.

⚠WARNING: Follow the appropriate agent evacuation and collection procedures as specified by local requirements. Use the hospital gas evacuation system whenever possible.

1. Prepare for the mechanical checks:

   - Set the system master switch to "OFF" and unplug the power cord from the wall outlet.
   - Disconnect all pipeline hoses from the wall and the gas machine.
   - Make sure that a cylinder wrench is available if appropriate.
   - Close any gas cylinder valves.
   - Turn the flow controls fully clockwise.
   - Make sure that the needle valves and knobs are securely attached.

   Note: If a needle valve or a knob is loose, refer to the link system (N_2O or O_2 control) or the individual flow control calibration procedure.

2. Check for external damage. Make sure that:

   - The frame is in good condition, with no bent or loose members.
   - The casters are securely attached.
   - The drawers work smoothly and the end stops prevent you from pulling the drawers out of the cabinet.
   - With the brake off, the gas machine rolls smoothly - Do Not lubricate the casters.
   - Setting the brake prevents you from moving the gas machine.
   - An operation and maintenance manual and a preoperative check-out procedure are stored with the machine.

- There is no evidence of water damage to the exterior of the machine.
- There is no evidence of water in the flowtubes.
- Shelves and accessories are securely attached.

⚠ **CAUTION: Do not exceed the following shelf weight limit(s): top shelf 22 kg (48 lb); middle shelf 11 kg (24 lb). Make sure that all equipment on the top shelf is securely attached.**

- The shelves are not overloaded.

  Note: If the shelves are near their weight limits, installing the base weight kit helps make the Excel easier to maneuver. Refer to the Illustrated Parts section for stock numbers.

3. Remove any cylinders and check the gas supply modules. Make sure that:

   - The gas connections, gauges, and flowmeter module do not appear damaged.
   - All pressure gauges read zero.
   - Index pins are tight and properly positioned on the cylinder yokes.
   - The cylinder connections (yoke and T handle or adapter and sealing ring) are in good condition.
   - Install the cylinders. Plug any empty yokes.

4. Check the vaporizer mounting:

   - The tops of the vaporizers must be aligned and level.
   - All locking levers must be in the locked position (fully clockwise) and all vaporizer concentration controls must be OFF.
   - Try to lift the vaporizers off the manifold. If a vaporizer lifts off, remount it, lock it in place and repeat this step.

   ⚠ **WARNING: Do not use a vaporizer that repeatedly lifts off the manifold when its locking lever is in the lock position.**

   - Press the control release and turn one vaporizer concentration control to 1%.
   - Check the alignment of the interlock rods. Make sure that you cannot operate any of the other vaporizer concentration controls while another vaporizer is "ON."

⚠ **WARNING: Do not use the system if the vaporizer interlock system allows more than one vaporizer to be switched "ON" at a time.**

- Set the vaporizer to OFF.
- If the vaporizers have funnel fill ports, make sure that the caps and the drain plugs are tight.
- If the vaporizers have keyed fill ports, make sure that the key lock levers point up and the valve control levers are flush against the front of the vaporizer.

  Note: Control locations on Tec 4, Tec 5 and Tec 6 vaporizers differ slightly.

⚠ **CAUTION: Open the cylinder valves s-l-o-w-l-y to help avoid damaging the regulators.**

5. With cylinder supplies, perform the high pressure leak check:

   a. Set the system master switch to "OFF."

   b. Open the cylinder valve.

   c. Check the cylinder pressure. Cylinder pressure must be at least 51.4 Bar (745 psig) to run this test.

      Important: If the cylinder pressure is below the following levels, the cylinder is not full. Starting with a full cylinder, helps ensure that you will not run out of gas.

      For O_2 Cylinders: 131.1 to 151.8 Bar (1900 to 2200 psig)
      For Air Cylinders: 151.8 Bar (2200 psig)
      For N_2O Cylinders: Pressure does not indicate true contents
      For CO_2 Cylinders: Pressure does not indicate true contents

   d. Record the cylinder pressure and close the cylinder valve.

   e. Make sure that there is no visible change in the cylinder gauge reading. If the cylinder gauge reading decreases in one minute, there is a high pressure leak.

   f. If there is a high pressure leak:

⚠ **CAUTION: Use one cylinder gasket per yoke. Extra gaskets may cause a leak. Not using a cylinder gasket will also cause a leak.**

- With any cylinder: check for a damaged cylinder gasket, a loose tee handle or DIN cylinder adapter, or an open pressure relief valve.

- With an air or O_2 cylinder: also check for leaks through the power outlet or the flush valve (O_2 leak only).

g. Repeat steps b through f for each cylinder.

Note: Monitor or ventilator alarms may sound.

6. Open the cylinder valves or connect the pipeline supplies. Make sure that pipeline pressure is a nominal:

ISO, Austria, Italy, Scandinavia, Spain, Switzerland	414 kPa (60 psig)
German	500 kPa (75 psig)
France, Australia	345 kPa (50 psig)

⚠ **CAUTION: Overtightening or forcing a flow control can damage the gas machine.**

7. Check the vaporizer back pressure:

a. Plug the electrical power cord in, set the system master switch to "ON" and adjust the O_2 flow to 6 L/min. Make sure that the O_2 float does not oscillate or stick.

Note: An alarm may sound briefly when the unit is switched ON.

b. Adjust vaporizer concentration from 0 to 1% click by click and observe the O_2 flow.

c. Return the vaporizer to "OFF." If O_2 flow decreased by more than 1 L/min during step b, move the vaporizer to a different port and repeat step b. If the problem follows the vaporizer, replace the vaporizer. Otherwise, replace the port valve cartridge.

d. Repeat steps b and c for each mounted vaporizer.

⚠ **WARNING: A low pressure leak means that metabolic gases and anesthetic agent are leaking into the atmosphere instead of going into the patient circuit. Low pressure leaks must be repaired before the gas machine is used.**

Note: There are three versions of the low pressure leak test (step 8): a negative pressure low pressure leak test done with a squeeze bulb; a positive pressure low pressure leak test that conforms to ISO standards; and a positive pressure low pressure leak test that conforms to BSI standards. Perform the appropriate test for your system.

8. Perform a negative low pressure leak check:

Note: This version of the low pressure leak test works with Australian, French, ISO 110, Italian, and Scandinavian Excels only.

a. Test the low pressure leak test device:

- Occlude the inlet and squeeze the bulb until it is fully collapsed.
- If the bulb inflates in less than 60 seconds, replace the leak test device.

b. Set the system master switch to "OFF"

Note: The pneumatic alarm may sound briefly.

c. Make sure that all vaporizers are OFF.

d. Switch "ON" each of the gas supplies, either by connecting pipeline input or by slowly opening the cylinder valve.

e. Turn the flow controls one and a half turns counter-clockwise. With the system master switch set to "OFF," there should be no flow. Any O_2 flow indicates a leak through the system master switch.

Note: The vacuum from the leak check device may cause the floats to rise slightly. This is normal.

f. Connect the leak test device to the common gas outlet. Squeeze and release the hand-bulb until it is fully collapsed. If the bulb inflates in less than 30 seconds, there is a leak in the low pressure circuit or the vaporizer bypass.

- If the unit has an Air/N_2O selector switch, change the switch position and repeat step f.
- If the unit has a dual common gas outlet, select the other outlet port and repeat step f.

g. Set one of the vaporizers to 1% and repeat step f. Remove the test device to relieve the vaporizer pressure. Then switch the vaporizer OFF.

Note: The vaporizers will not seal unless an external o-ring is installed on each port valve cartridge.

Note: If a leak occurs only when a vaporizer is "ON," move the vaporizer to another port and see if the leak follows the vaporizer or stays with the port. Then, replace the implicated component (port valve cartridge or vaporizer).

h. Repeat steps f and g for each additional vaporizer.

8. Complete the low pressure leak check (positive pressure ISO 5358 Standard):

Note: This low pressure leak test can be used with all Excels.

a. Fully close all flow control valves (minimum flow).

b. Attach the test device to the common gas outlet.

   To help ensure accurate readings the test device flowtube must be positioned vertically.

c. Fully open the test device needle valve.

⚠ **CAUTION: Failure to perform this step could damage the test device pressure gauge.**

d. Remove all vaporizers from the vaporizer manifold.

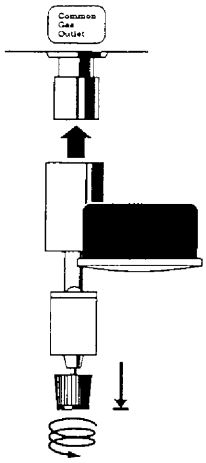

AA.35.001

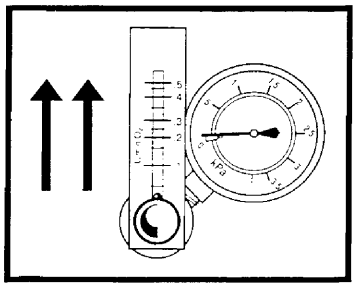

AA.35.008

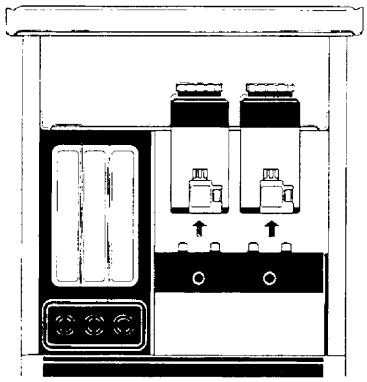

AA.35.003

e. Open the air (if present) or the N_2O flow control valve to establish a total flow of 0.4 L/min of gas through the test device flowmeter.

   Confirm that the test device pressure gauge remains on zero and that all other machine flow control valves are fully closed.

f. Close the test device needle valve until a pressure of 3 kPa is indicated and maintained on the test device pressure gauge.

g. Record the flow shown on the test device flowmeter. When tested under these described conditions, the flow shall not drop below 0.35 L/min.

- If the unit has an Air/N_2O selector switch, change the switch position and repeat this test.

- If the unit has a dual common gas outlet, select the other outlet port and repeat this test.

h. If vaporizers are being used, add the vaporizers one at a time and repeat the low pressure leak test with each vaporizer switched both "OFF" and "ON."

i. When tested under these described conditions, the flow shall not drop below 0.35 L/min.

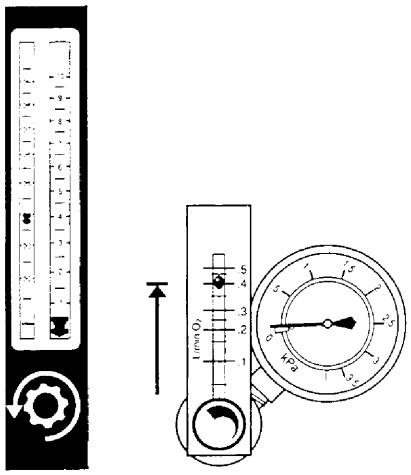

AA.35.009

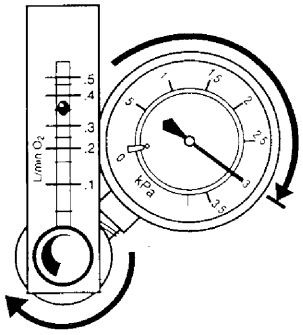

AA.35.010

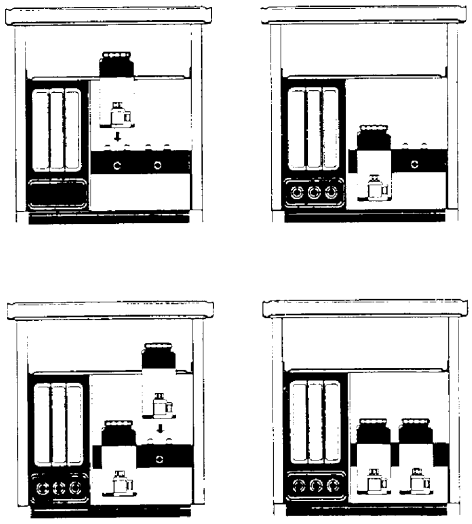

AA.35.007

8. Complete the low pressure leak check (positive pressure BSI Standard):

Note: This low pressure leak test can be used with all Excels.

a. Fully close all flow control valves.

b. Attach the test device to the common gas outlet.

   To help insure accurate readings the test device flowtube must be positioned vertically.

c. Fully open the test device needle valve.

⚠ **CAUTION: Failure to perform this step could damage the test device pressure gauge.**

d. Remove all vaporizers from the vaporizer manifold.

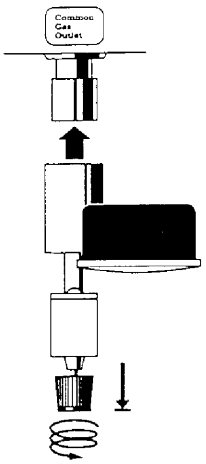

AA.35.001

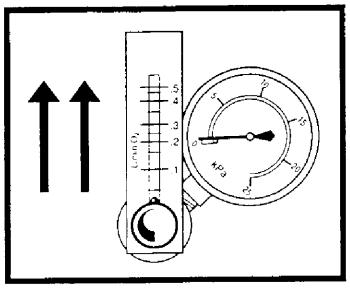

AA.35.002

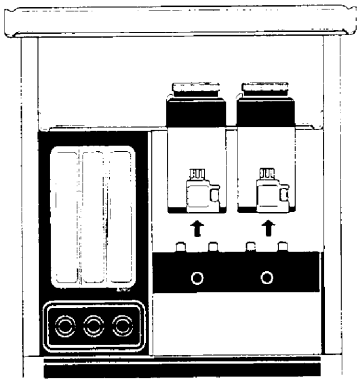

AA.35.003

e. Open the air (if present) or N_2O flow control valve to establish a total flow of 0.4 L/min of gas through the test device flowmeter.

   Confirm that the test device pressure gauge remains on zero and that all other machine flow control valves are fully closed.

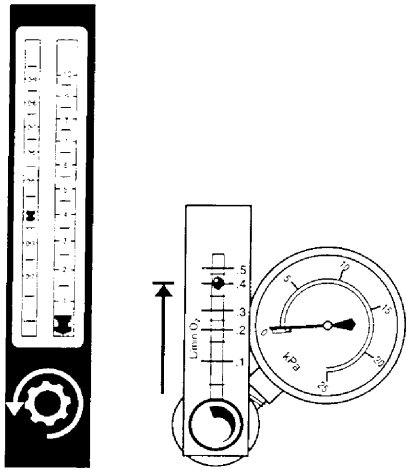

f. Close the test device needle valve until a pressure of 20 kPa is indicated and maintained on the test device pressure gauge.

g. Record the flow shown on the test device flowmeter. When tested under these described conditions, the flow shall not drop below 0.3 L/min.

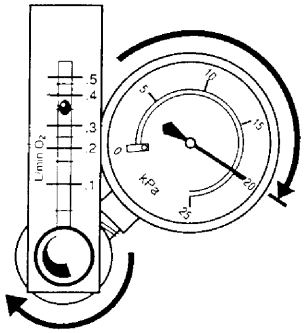

- If the unit has an Air/N_2O selector switch, change the switch position and repeat this test.

- If the unit has a dual common gas outlet, select the other outlet port and repeat this test.

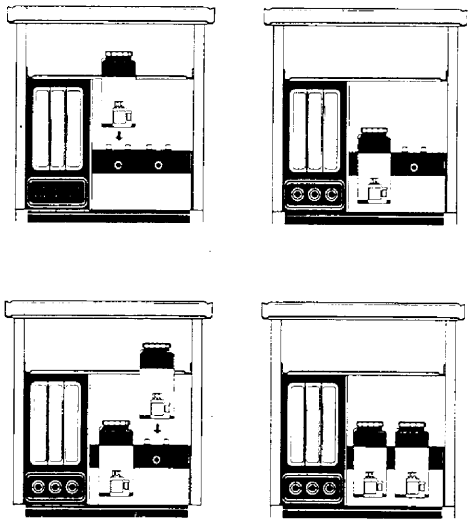

h. If vaporizers are being used, add the vaporizers one at a time and repeat the low pressure leak test with each vaporizer switched both "OFF" and "ON."

i. When tested under these described conditions, the flow shall not drop below 0.3 L/min.

⚠ **CAUTION: Make sure that all vaporizers are "OFF" before continuing.**

9. Reconnect the common gas outlet to the breathing circuit and the scavenging system, set the system master switch to "ON," adjust the O_2 flow to 2 L/min and purge the gas machine with O_2 for one minute.

   Turn each vaporizer "ON" and "OFF" to relieve the pressure.

⚠ **WARNING: After performing the low pressure leak test, do not use the anesthesia system until the system has been purged with O_2. Using a system that has not been purged with oxygen may result in incorrect gas mixtures and injury to the patient.**

10. Turn all flow controls completely clockwise and check the following minimum flows:

    O_2: 200 ± 25 mL/min
    N_2O: 0 mL/min (the float rests on the bottom and does not spin)
    Additional gases: 0 mL/min (the float rests on the bottom and does not spin)

    If the unit has an Air/N_2O selector switch, change the switch position and check the minimum flow of the other gas (air or N_2O).

    Note: If the minimum N_2O or O_2 flows are out of tolerance, refer to the link system adjustment procedure. If the minimum flows of additional gases (air, etc.) are out of tolerance refer to the adjustment procedure for that gas.

11. Make sure that you can increase the O_2 flow to 10 L/min without changing the N_2O flow.

    Note: If the N_2O flow changes or if the O_2 flow cannot go this high, refer to the link system adjustment procedure.

12. Check the maximum flows:

    - Turn each flow control from minimum to maximum flow. Check that the float moves smoothly, without oscillating or sticking.

      Note: A sticking or oscillating float most commonly indicates a needle valve problem or a dirty flowtube.

    - Set the O_2 flow to 10 L/min.

    - On French Excels, make sure that you can turn the O_2 flow control between two and a half and three and a half additional turns counter-clockwise.

    - On all other Excels, make sure that you cannot turn the O_2 flow control more than two additional turns counter-clockwise.

- Set the N_2O flow to 10 L/min. Make sure that you cannot turn the N_2O flow control more than one additional turn counter-clockwise.

  Note: If possible, check the maximum flowrate of any additional gases with a full cylinder. Variations in supply pressure affect flow.

- For air, make sure that with the flow set to 15 L/min, you cannot turn the flow control more than one additional turn counter-clockwise.

- CO_2: 2 L/min (with high flow kit) or 500 to 550 mL/min.

- Turn all flow controls fully clockwise (minimum flow).

Note: If maximum N_2O or O_2 flows are out of tolerance, refer to the link system adjustment procedure. If the maximum flows of other gases are out of tolerance refer to the adjustment procedure for that gas.

13. Make sure that decreasing the N_2O flow does not change the O_2 flow.

⚠ **WARNING: Calibration and test procedures are the only places where the N_2O knob should be used to drive up the O_2 flow. This should never be done while the gas machine is being used on a patient.**

14. Use the Ohmeda Link Proportion Limiting Control System to check the N_2O flow control. Observe the following precautions:

    - If an Air/N_2O selector switch is present, set it to N_2O.

    - Adjust only the N_2O flow control.

    - Start with the N_2O and O_2 flow controls at the minimum settings.

    - Increase the N_2O flow as specified in the table and make sure that the O_2 flow is in the allowed range.

    - If you overshoot a setting, turn the O_2 flow control clockwise until the N_2O flow decreases to the previous level and continue with this step.

Table Step 14- Link proportioning system set to 25%

Set the N_2O flow to:	The O_2 flow must read:
0.9 L/min	0.24 to 0.36 L/min
1.5 L/min	0.40 to 0.61 L/min
3.0 L/min	0.79 to 1.22 L/min
6.0 L/min	1.58 to 2.44 L/min
9.0 L/min	2.37 to 3.66 L/min

Table Step 14- Link proportioning system set to 30% (France)

Set the N_2O flow to:	The O_2 flow must read:
0.9 L/min	0.31 to 0.55 L/min
1.5 L/min	0.50 to 0.76 L/min
3.0 L/min	1.04 to 1.55 L/min
6.0 L/min	2.07 to 3.13 L/min
9.0 L/min	3.09 to 4.71 L/min

Note: If adjustment is required, refer to the link system calibration procedure. Deviations at low flows generally indicate a problem with the kick-in point. Problems at high flows can be corrected by adjusting the secondary O_2 regulator.

15. Use the Ohmeda Link Proportion Limiting Control System to check the O_2 flow control. Observe the following precautions:

    - If an Air/N_2O selector switch is present, set it to N_2O.
    - Start with an initial O_2 flow of 4 L/min and an initial N_2O flow of 10 L/min.
    - Decrease the O_2 flow as specified in the table and make sure that the N_2O flow is in the allowed range.
    - If you overshoot a setting, turn the N_2O flow control counter-clockwise until the O_2 flow rises to the previous level and continue with this step.

Table Step 15- Link proportioning system set to 25%

Set the O_2 flow to:	The N_2O flow must read:
3.0 L/min	7.36 to 11.41 L/min
1.0 L/min	2.46 to 3.80 L/min
0.5 L/min	1.23 to 1.90 L/min
0.3 L/min	0.74 to 1.14 L/min

Table Step 15- Link proportioning system set to 30% (France)

Set the O_2 flow to:	The N_2O flow must read:
3.0 L/min	6.14 to 7.87 L/min
1.0 L/min	2.05 to 2.63 L/min
0.5 L/min	1.02 to 1.32 L/min
0.3 L/min	0.61 to 0.79 L/min

Note: If adjustment is required, refer to the link system calibration procedure. Deviations at low flows generally indicate a problem with the kick-in point. Problems at high flows can be corrected by adjusting the secondary O_2 regulator.

⚠ **WARNING: Do not use the anesthesia system if the Ohmeda Link Proportion Limiting Control System does not operate within the permitted ranges. Using an incorrectly operating control system may result in incorrect gas mixtures and injury to the patient.**

16. Check the low O_2 pressure alarm and the shutoff valves:

    Note: If the unit has an Air/N_2O selector switch set it to N_2O.

    a. Connect the test fixture and gauge to the O_2 power outlet. Refer to Test Fixtures in the illustrated parts section for test fixture information.

    b. Read through the rest of this step before continuing. Steps f through j happen very quickly.

    c. Set the system master switch to "ON."

    d. Slowly open all cylinders valves.

    e. Set all flow controls for mid-range flow.

    f. Occlude the orifice on the test fixture.

    g. Shut "OFF" the O_2 supply either by closing the cylinder valve or disconnecting the pipeline supply.

    h. Watch the test gauge. Make sure that the low O_2 pressure alarm sounds when the test gauge reading is approximately 186 to 228 kPa (27 to 33 psig).

    i. Make sure that the pneumatic alarm continues for at least seven seconds.

    Note: If the low O_2 pressure alarm does not function properly (steps g and h), refer to the section "Adjusting the Low O_2 Alarm."

    j. Make sure that all floats except the O_2 float begin to fall when the test gauge reads between 138 and 173 kPa (20 and 25 psig).

    k. Make sure that the O_2 float is the last float to settle on the bottom.

    l. Disconnect the test fixture from the power outlet.

    m. On German systems (the air flow continues during an O_2 supply failure) and systems that do not have an Air/N_2O selector switch, continue with step 17.

    n. If the unit has an Air/N_2O selector switch, change the switch position, reconnect the O_2 supplies and repeat this step for air.

Note: If any other float stays up longer than the O_2 float, replace the shutoff valve for that gas. This does not apply to air on German Excels (the air flow continues during an O_2 supply failure.)

17. Turn all flow controls completely clockwise (minimum flow).

18. Check the flush valve:

    a. Remove any tubing connected to the common gas outlet.

    b. Connect a flow test device to the common gas outlet.

    c. Open one O_2 cylinder valve.

    d. Press the flush button. Make sure that the flow rate is 35 to 70 L/min (35 to 90 L/min in Germany).

    e. Disconnect the flow test device from the common gas outlet.

19. Check the pressure relief valve (part of the common gas outlet):

    Note: The pressure maintained by the pressure relief valve changes slightly with the flow rate.

    a. Make sure that all flow controls are fully clockwise (minimum flow), one O_2 cylinder valve is open, and the system master switch is "ON."

    b. Connect a gauge or a digital manometer to the common gas outlet.

    c. Make sure that the gauge reading stabilizes at approximately 27.6 to 38 kPa (207 to 285 mm Hg; 4 to 5.5 psig) at 200 mL/min flow.

       Note: Replace the Common Gas Outlet Pressure Relief Valve if the test fails.

20. Unplug the electrical power cord and make sure that power failure alarms sound:

    - On systems with a 7750, a power failure alarm sounds.
    - On systems with a 7800 ventilator, make sure that the ventilator operates with battery power.
    - Test the power failure alarm and the backup battery of any system accessories according to their operation and maintenance manual.

21. Install the gas supply cover and the flowmeter shield and rear panel (if necessary).

22. Plug the power cord back into an electrical outlet, check the electrical connections, and switch the system back ON.

23. Check the Excel lighting:

    If the Excel has a light package, switch the light package "ON." It must illuminate.

    Note: Outlet boxes have an internal 2 Amp, 250 VAC, fast acting fuse in the transformer assembly (light package fuse).

24. Connect an approved test device and make sure that the leakage current is less than 100µA for the 100/120V Excel and 500µA for the 220/240V Excel or meets national standards.

25. Make sure that the ground resistance between the equipotential stud or a convenient mounting screw and the ground pin on the power cord is less than 0.2 Ohms or meets national standards.

26. Vent the gas machine:

    - Close all cylinders valves and disconnect pipeline supplies.
    - Turn all flow controls fully clockwise (minimum flow).
    - Connect an O_2 supply. Slowly open an O_2 cylinder valve or connect a pipeline supply.
    - Set all flow controls except O_2 for maximum flow to bleed internal pressure.
    - Wait until all gas flows except O_2 stop.
    - Set the Air/N_2O switch, to the other position (if present) and wait until all gas flows except O_2 stop.
    - Turn the flow controls fully clockwise (minimum flow).
    - Disconnect the O_2 supply or close the O_2 cylinder valve.
    - Set the system master switch to "OFF."

27. Continue with the System Check-Out.

3.2 System Check-Out

A. System Connections

The gas machine must be completely reassembled at this point to allow accurate leak testing.

Use this section as a quick reference if you are already familiar with individual monitor, ventilator, and absorber connections. For detailed information and accessory part numbers, refer to the individual operation and maintenance manual.

⚠WARNING: Use only Ohmeda specified cables, hoses, and tubing for external connections. Alternative cables, hoses, or tubing could cause false sensor readings or damage to the system.

1. Make sure that the ventilator bellows or the 7750 drive unit are securely attached. If an absorber is present, also check:

   - The absorber is securely attached.
   - There is no condensate in the absorber.
   - The absorber drain is completely closed.
   - There is absorbent in the canister(s).
   - The canisters are properly seated and locked in position. On the GMS absorber, this means that the locking level is in the "Locked" position.
   - If the absorber has a pressure gauge, check that it reads 0 kPa (psig) when the absorber is open to the atmosphere.

2. Make the monitoring connections:

⚠ WARNING: To ensure accurate pressure monitoring, the pressure sensing line must be kept clear of condensate.

⚠ WARNING: Disconnecting the O_2 sensor without removing and shorting the sensor cartridge can cause false high O_2 readings that may take hours to stabilize.

   - If you have a 7800 ventilator and a GMS Absorber, refer to Figure 3-1.
   - If you have a 7800 ventilator and an absorber other than the GMS (i.e. a MAS Absorber or a non Ohmeda absorber), refer to Figure 3-2. Circuit adapters may be required if the absorber lacks inspiratory pressure and O_2 sensor ports.

Note: The 7750 ventilator does not require external pressure sensing connections to the absorber or the patient circuit.

- If you have a 7750 connected to an absorber, connect the sensor to the absorber (Figures 3-1 and 3-2).
- If you have a 7750 ventilator connected directly to the patient circuit, connect the O_2 sensor to the drive unit inspiratory port and the expiratory flow transducer to the 'Y' piece common or the expiratory leg of the patient circuit (Figure 3-3).

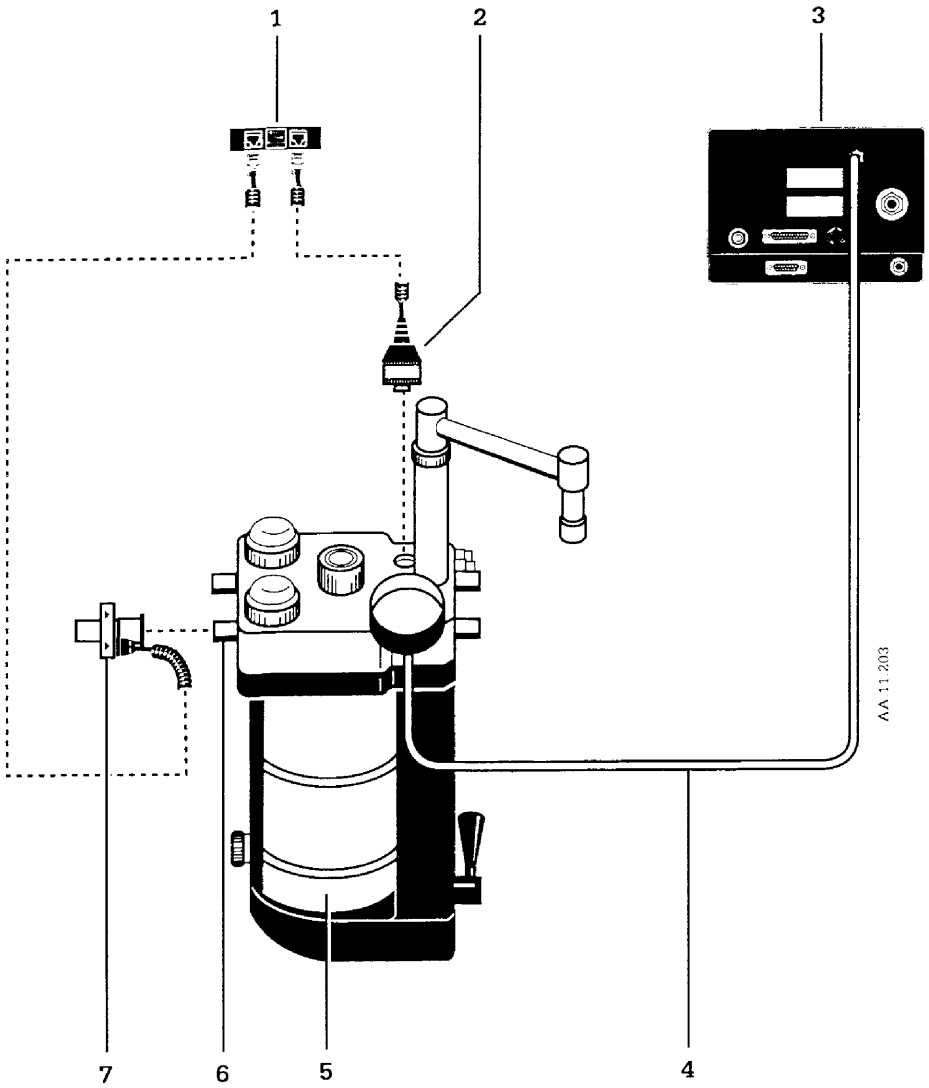

1. Patient Interface Panel (Side of Excel)
2. O_2 Sensor
3. 7800 Ventilator (Rear View)
4. Inspiratory Pressure Sensing Line
5. GMS Absorber
6. Expiratory Port GMS Absorber
7. Expiratory Flow Sensor

Figure 3-1 Monitoring connections 7800 ventilator with a GMS Absorber

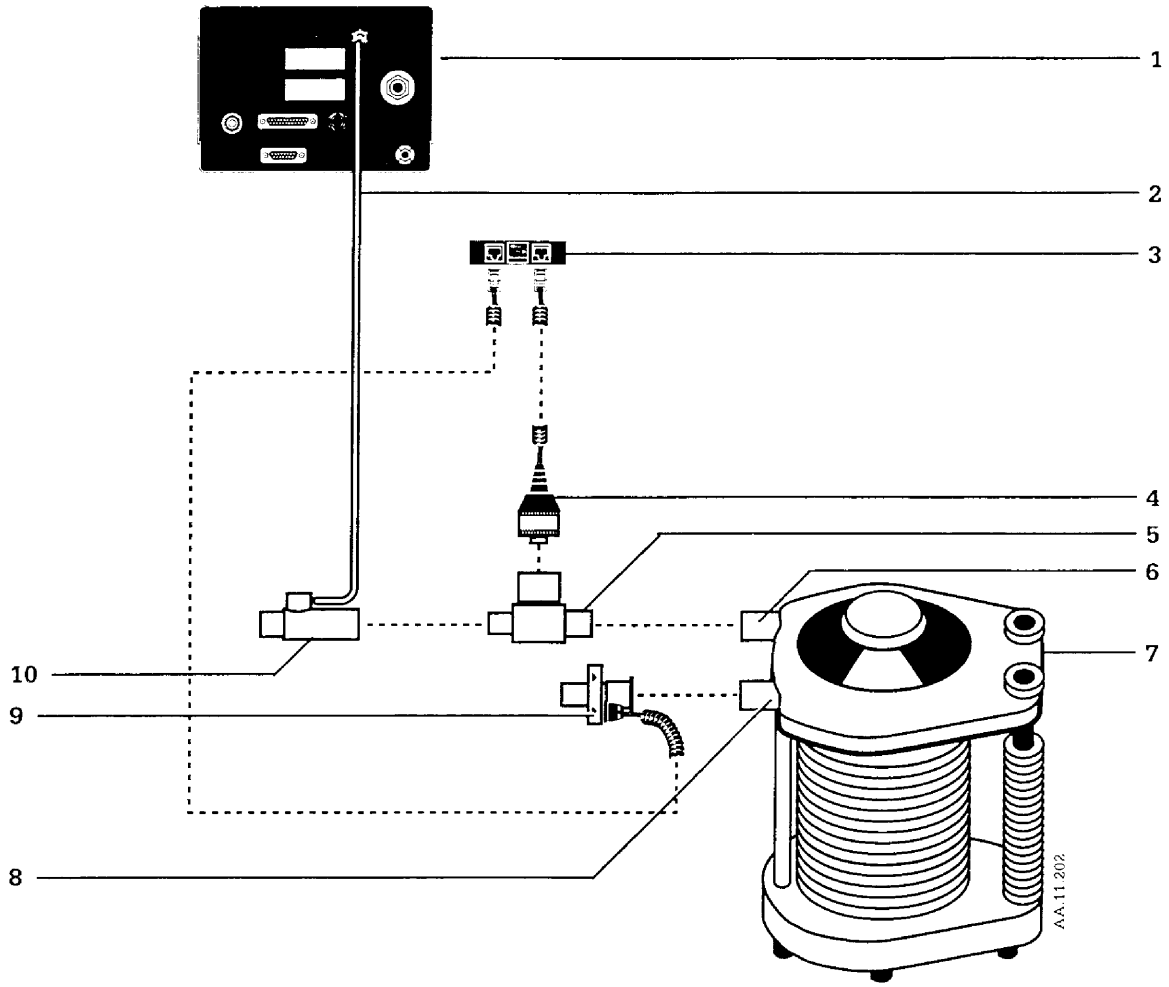

1. 7800 Ventilator (Rear View)
2. Inspiratory Pressure Sensing Line
3. Patient Interface Panel (Side of Excel)
4. O_2 Sensor
5. O_2 Sensor Adapter
6. Inspiratory Port (Absorber)
7. Absorber
8. Expiratory Port (Absorber)
9. Expiratory Flow Sensor
10. Pressure Line Adapter

Note: The Tee style sensor housing combines items 4 and 5 by replacing the front half of the standard sensor housing. The actual adapters required may differ with the absorber.

Figure 3-2 Monitoring connections 7800 ventilator with a non Ohmeda absorber

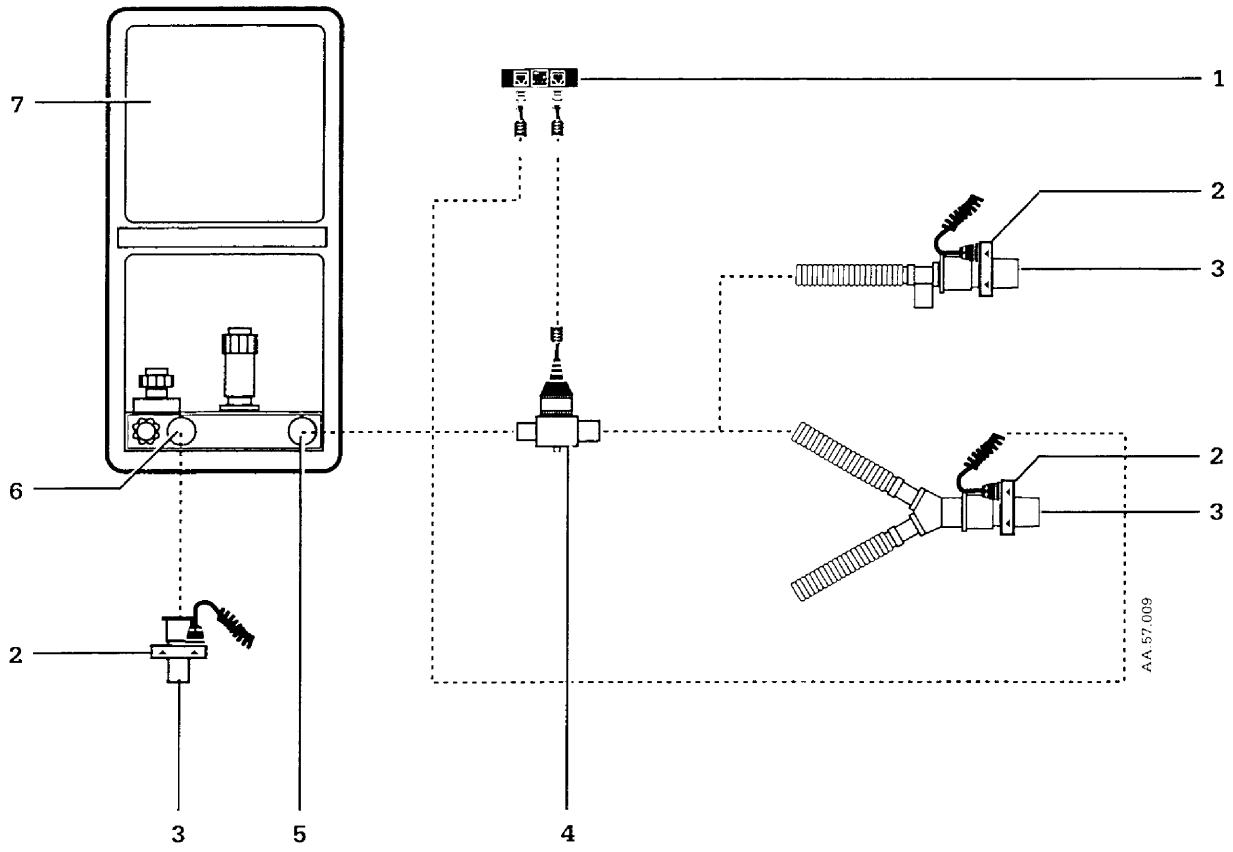

1. Patient Interface Panel (Side of Excel)
2. Expiratory Flow Sensor (Three Alternate Locations Depending on Cassette Type and Circuit)
3. To Patient
4. O_2 Sensor (With Tee Style Housing)
5. Inspiratory Port (Rebreathing or Non Rebreathing Cassette)
6. Expiratory port (Non Rebreathing Cassette)
7. 7750 Ventilator Drive Unit

Note: The Tee style sensor housing replaces the front half of the standard sensor housing. An adapter can be used in place of the Tee style housing.

Figure 3-3 Monitoring connections 7750 ventilator with a non Ohmeda absorber

3. Make the ventilator and the gas scavenging connections:

   - For systems with a 7800 ventilator, a GMS Absorber, and an absorber manifold, refer to Figure 3-4.
   - For systems with a 7800 Ventilator, a GMS Absorber but no manifold or a non Ohmeda absorber, refer to Figure 3-5.
   - For systems with a 7750 ventilator but no absorber (non rebreathing configuration), refer to Figure 3-6.
   - For systems with a 7750 ventilator and an absorber (rebreathing configuration), refer to Figure 3-7.

   ⚠ **WARNING: Use only the Ohmeda, wire reinforced, corrugated tubing to connect ventilator drive gas to the bellows. Alternative tubing may kink or collapse.**

   ⚠ **WARNING: The fresh gas hose must be securely connected to the common gas outlet and the absorber.**

   ⚠ **WARNING: Do not connect the exhaust directly to a vacuum source. The vacuum may draw necessary gases from the patient circuit. Refer to the operation and maintenance manual for the waste gas scavenging valve for additional precautions and information.**

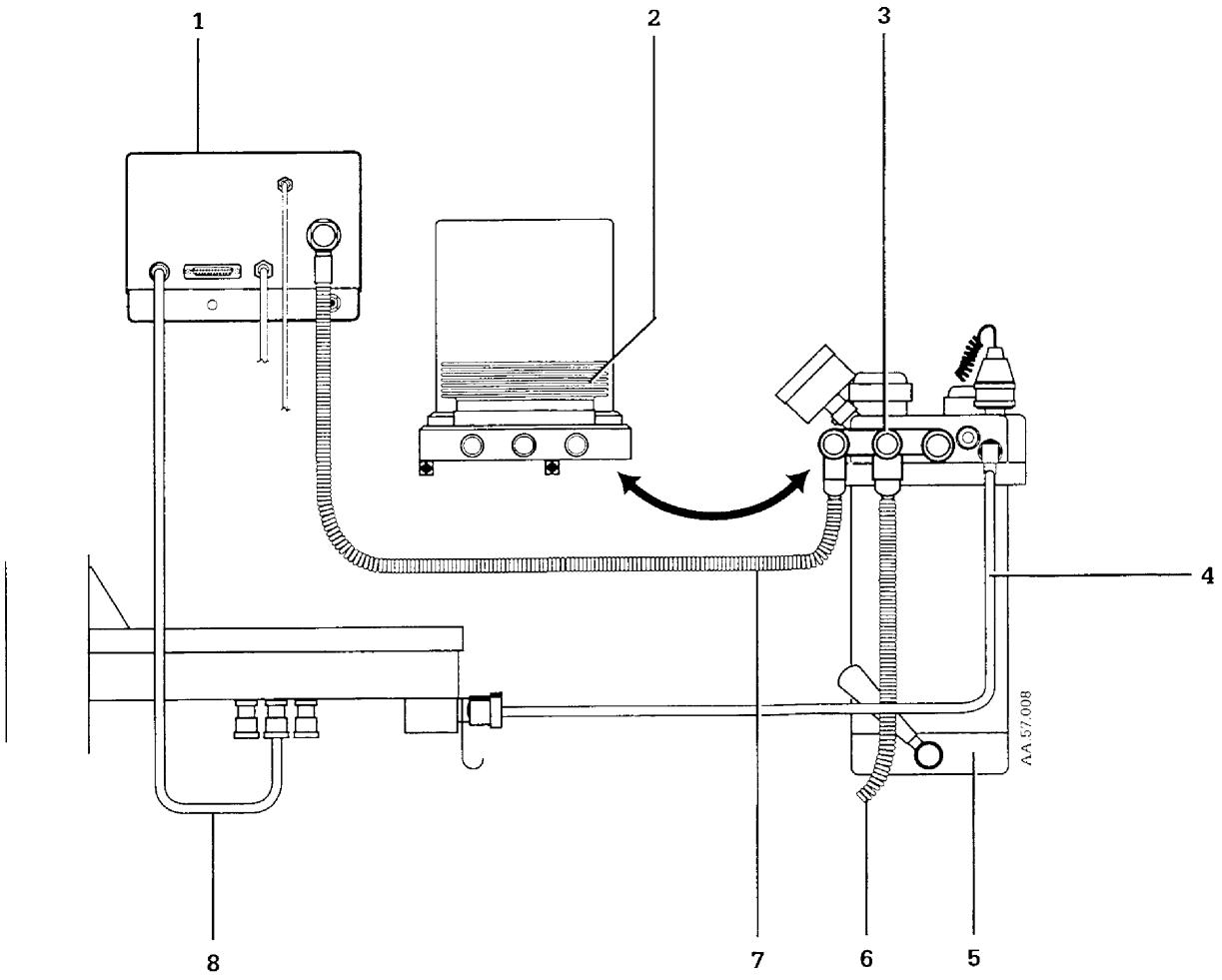

1. Typical Ventilator (Rear View)
2. Bellows
3. Interface Manifold (Attaches to Bellows)
4. Fresh Gas Hose (Attaches to Common Gas Outlet)
5. Absorber
6. Exhaust (To Waste Gas Scavenging)
7. Ventilator Drive Gas
8. Ventilator Supply (Attaches to Excel Power Outlet)

Figure 3-4 Ventilator and bellows connections to a GMS Absorber with manifold

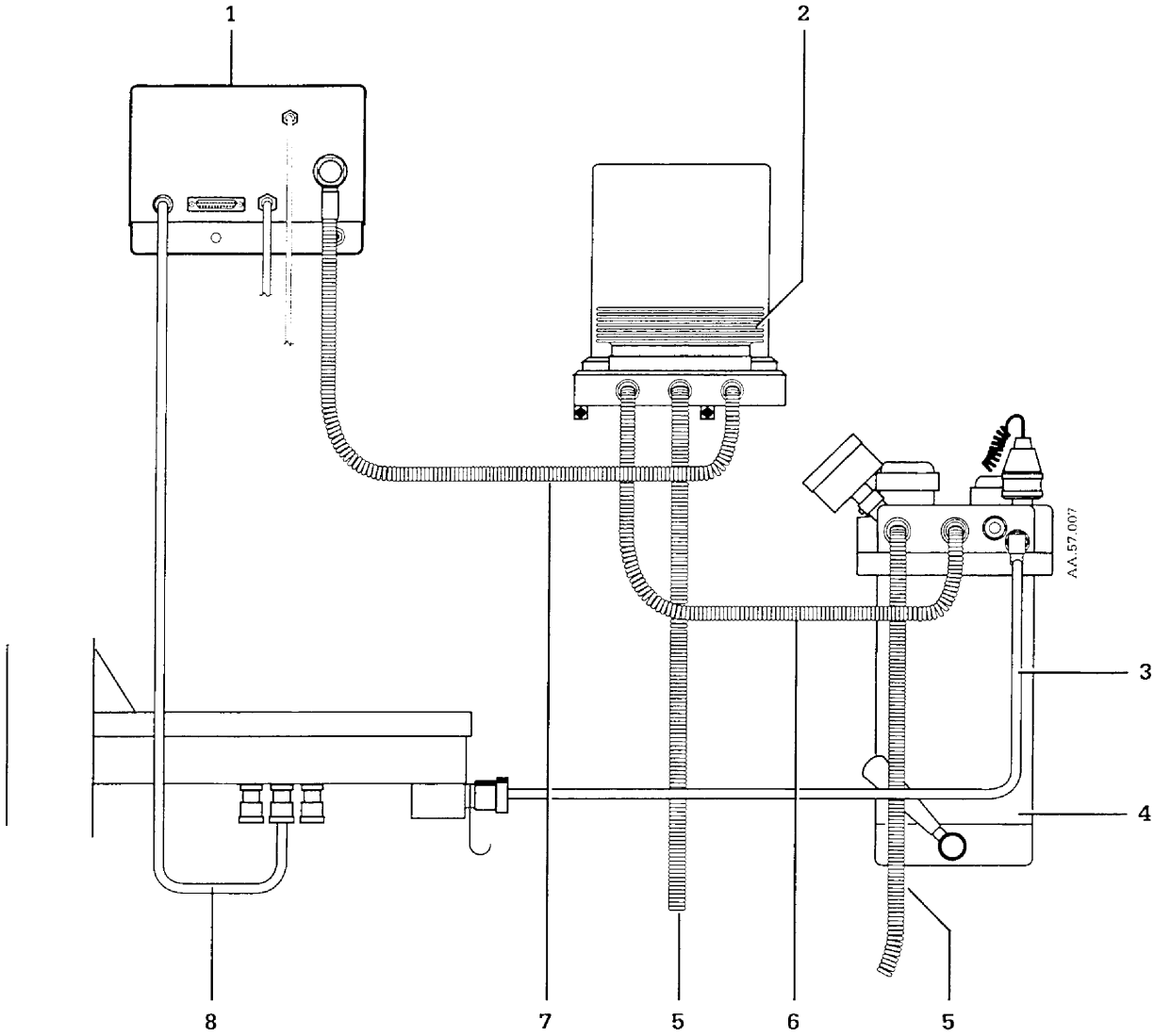

1. Typical Ventilator (7800 Rear View)
2. Bellows
3. Fresh Gas Hose (Attaches to Common Gas Outlet)
4. Absorber
5. Exhaust (To Waste Gas Scavenging)
6. Absorber Ventilator Port
7. Ventilator Drive Gas
8. Ventilator Supply (Attaches to Excel Power Outlet)

Figure 3-5 Ventilator and bellows connections without an absorber manifold

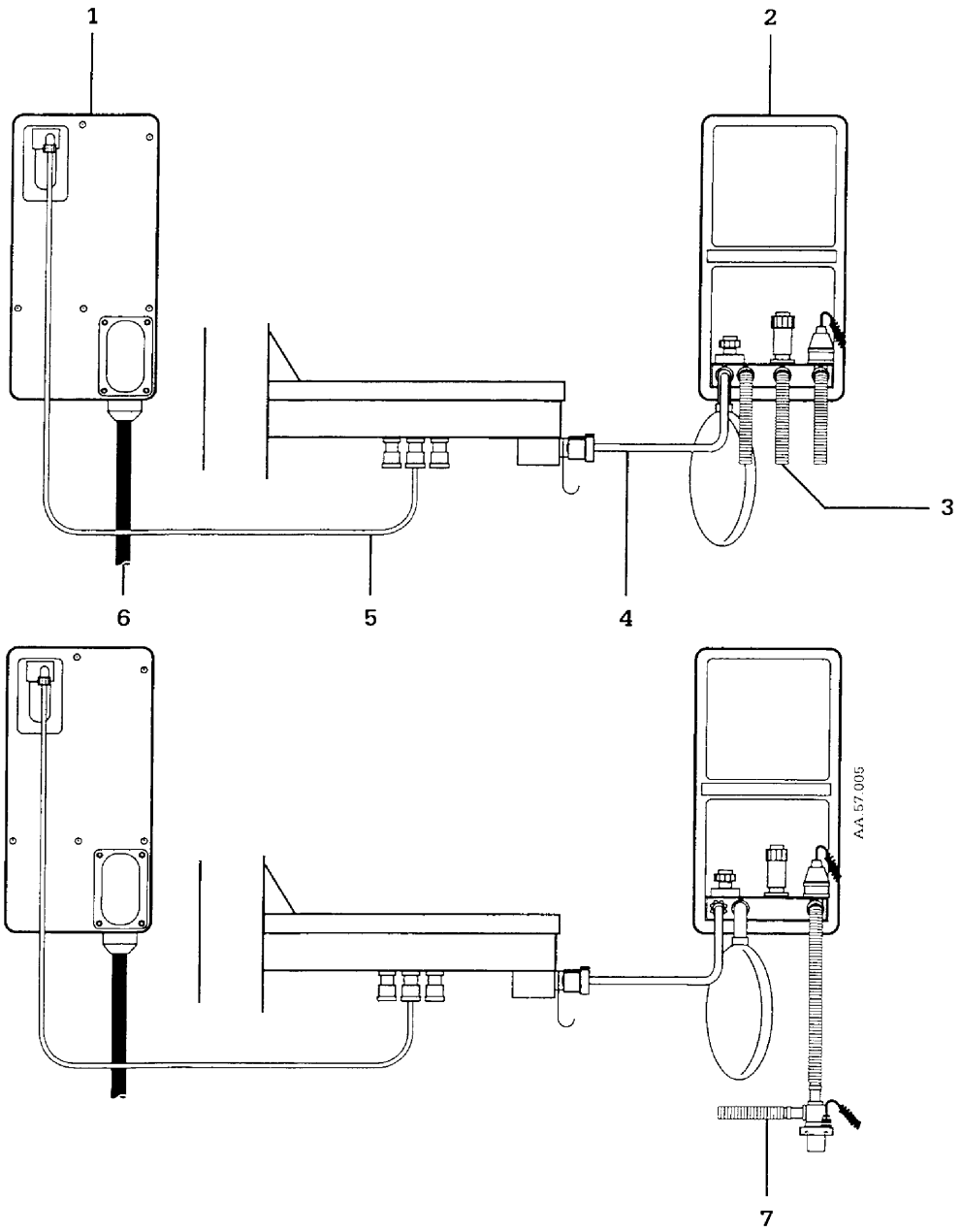

1. Ventilator Drive Unit (Rear View)
2. Ventilator Drive Unit (Front View)
3. Exhaust Connection (Non Rebreathing Cassette)
4. Fresh Gas Hose (Attaches to Common Gas Outlet)
5. Ventilator Supply (Attaches to Excel O_2 Power Outlet)
6. Umbilical Cord
7. Exhaust Connection (Rebreathing Cassette in Non Rebreathing Configuration)

Figure 3-6 7750 ventilator with a non rebreathing circuit

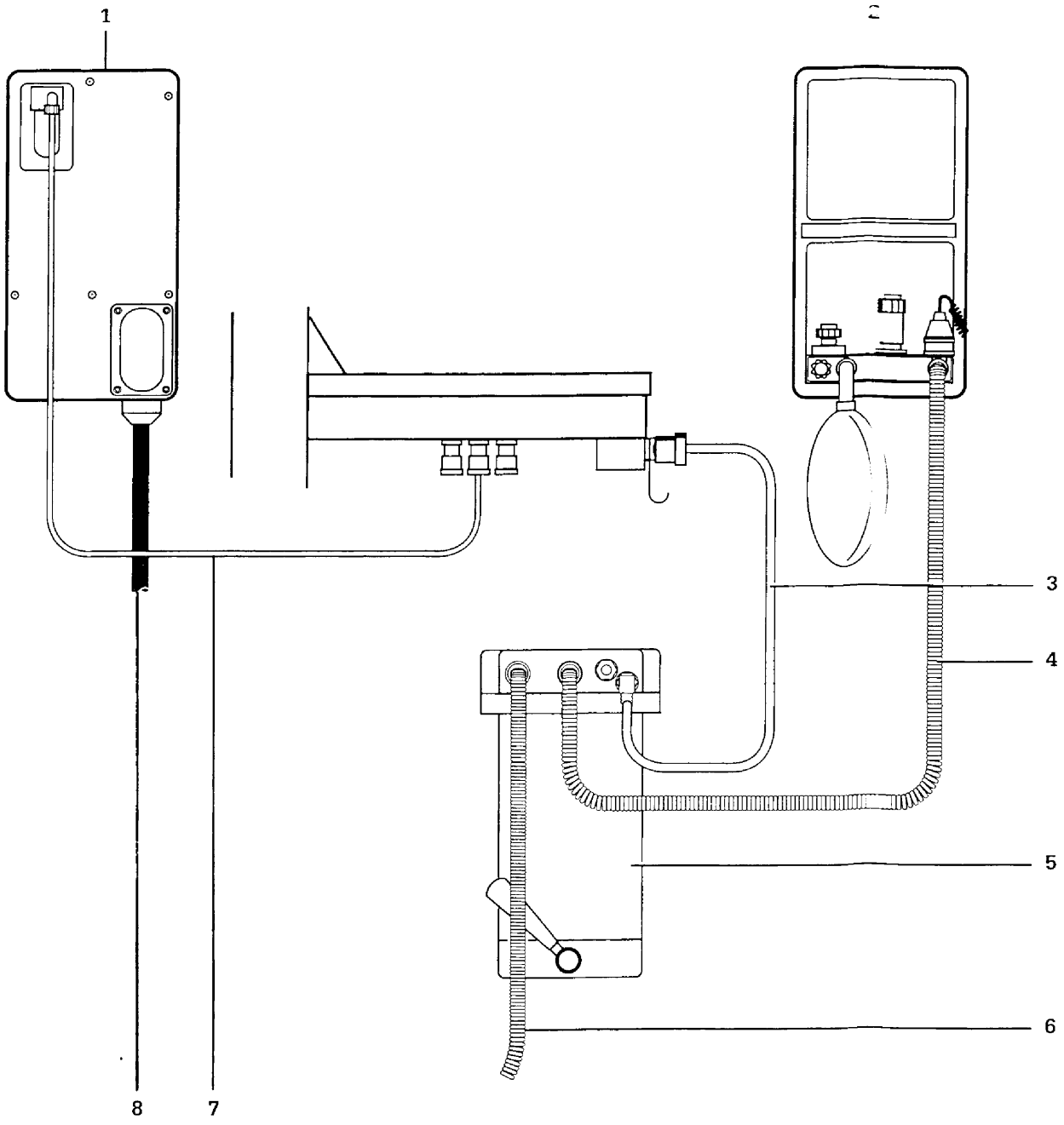

1. Ventilator Drive Unit (Rear View)
2. Ventilator Drive Unit (Front View)
3. Fresh Gas Hose (Attaches to Common Gas Outlet)
4. Absorber Ventilator Connection
5. Absorber
6. Exhaust Connection
7. Ventilator Supply (Attaches to Excel O_2 Power Outlet)
8. Umbilical Cord

Figure 3-7 7750 drive unit connections to an absorber

4. With a 7800 or a 7850 ventilator, connect the interface cable (Figure 3-8).

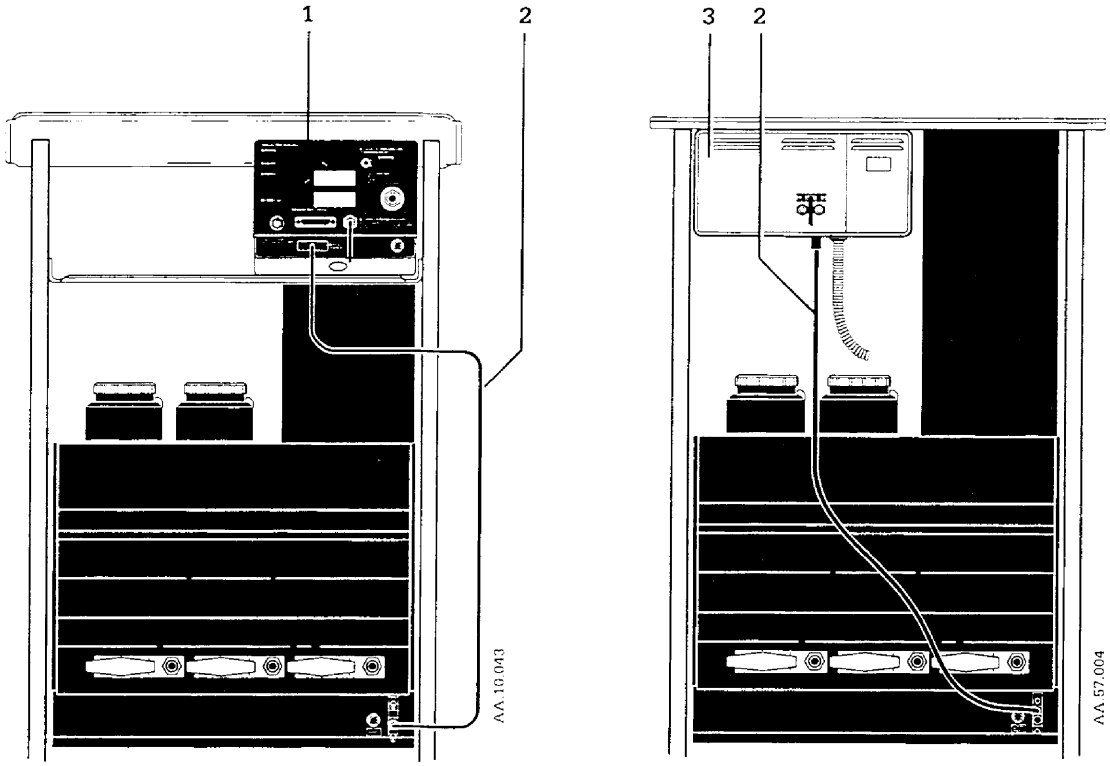

1. 7800 Ventilator (Rear View)
2. Interface Cable
3. 7750 Ventilator (Rear View)

Figure 3-8 Interface cable connections

5. For French Systems:

   - Connect the auxiliary port on the dual common gas outlet to the O_2 sensor (Figure 3-9).

   - Check that the French language is selected on the ventilator setup page.

   ⚠ **WARNING: The French language must be selected on the 7800 ventilator before you can use the auxiliary port on the dual common gas outlet. Any other language triggers a "VENT FAIL 15" alarm when the auxiliary port is selected.**

   - With a 7800 ventilator, set mechanical ventilation to "ON" and select the auxiliary port on the dual common gas outlet. The ventilator must

display SANS GAS FRAIS. Select the ventilator port on the dual common gas outlet and check that this message cancels.

- With a 7750 ventilator, check that mechanical ventilation is in progress. Then, select the auxiliary outlet and check that mechanical ventilation stops and the only monitored parameter is O_2 concentration.

  Note: If this step fails, inspect the switch connections (underneath the dual common gas outlet). With the ventilator port selected, you should measure continuity between pins 16 and 17 on the interface cable connector. With the auxiliary port selected, you should measure continuity between pins 16 and 18 on the interface cable connector.

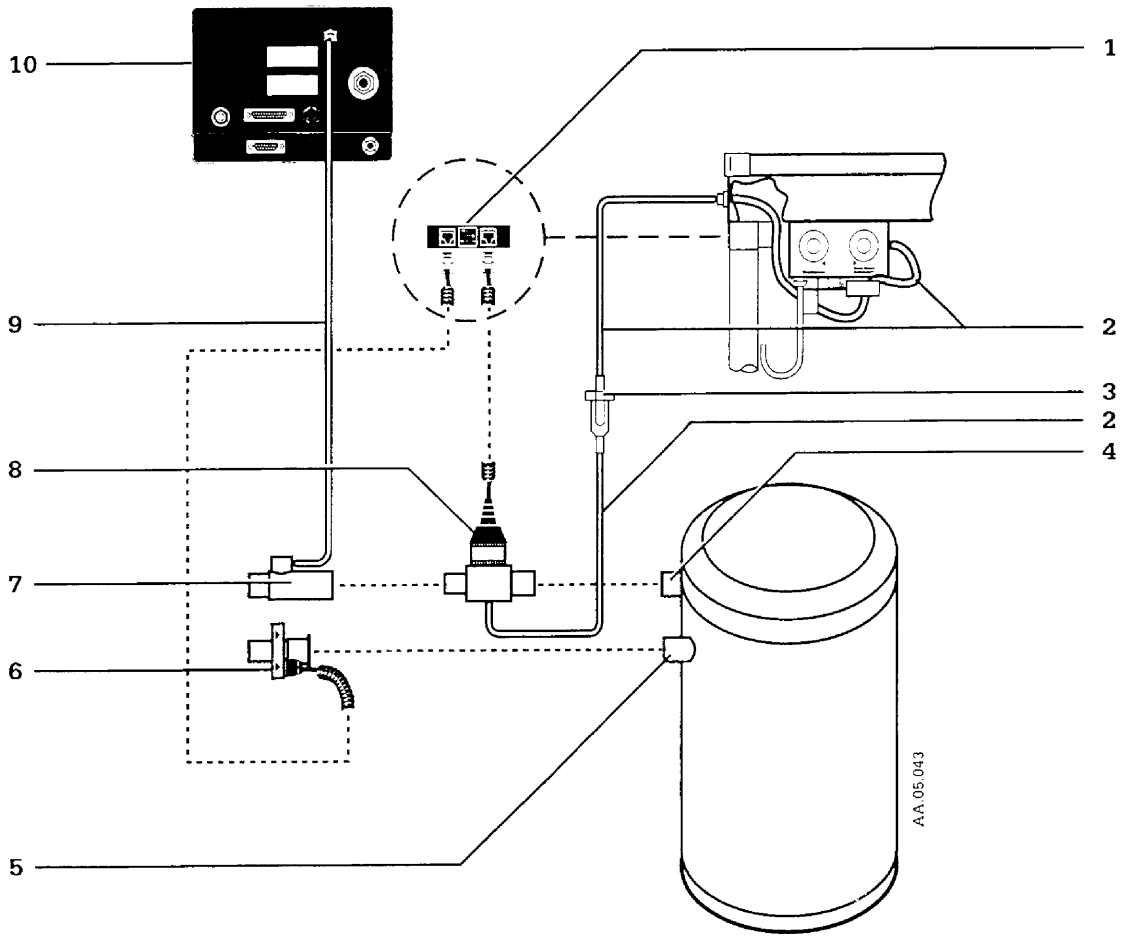

1. Patient Interface Panel
2. Auxiliary Port O_2 Sampling Line
3. One Way Valve (Prevents Leaks Out Auxiliary Port During Mechanical Ventilation)
4. Absorber Inspiratory Port
5. Absorber Expiratory Port
6. Volume Sensor
7. Pressure Sensing Adapter
8. O_2 Sensor with Tee Style Housing
9. Pressure Sensing Line
10. 7800 Ventilator (Rear View)

Figure 3-9 French dual common gas outlet, O_2 monitoring connections

6. Set the ventilator controls to appropriate levels to minimize unnecessary alarms and avoid mechanical ventilation during leak checks:

For the 7800 Ventilator:
Tidal Volume: 200 ml
Rate: 10 breaths/min
Inspiratory Flow: 10 L/min
Mechanical Ventilation: OFF
Sigh: If applicable, set to "OFF" on the Setup page
Inspiratory Pause: Cycle "ON" (LED Lights) then OFF
Low Min Vol: 0.0 L/min
Low O_2: 18%
High O_2: 00%
Inspiratory Pressure Limit: 100 cm H_2O
Sustained Pressure Limit: 30 cm H_2O
(Function of inspiratory pressure limit)
Reverse Flow (Setup page): OFF

For the 7750 Ventilator:
Power Switch: "ON." Mechanical Ventilation: OFF
Respiratory Monitoring: OFF
Low O_2: 18%

Note: Leak checks require pressurizing the circuit above the sustained pressure limit. Silence any pressure alarms that trigger during leak testing.

7. Check that an O_2 cylinder is installed.

⚠ **CAUTION: Open the cylinder valves s-l-o-w-l-y to help avoid damaging the regulators.**

8. Turn all flow controls to fully clockwise (minimum flow). Then slowly open the cylinder valves.

B. Absorber Checks (Leak, APL Valve, and Check Valve Tests)

Note: These checks are taken from the Ohmeda GMS Absorber Operation and Maintenance Manual. If your system uses a different absorber, consult the absorber Operation and Maintenance Manual. Refer to the GMS Absorber Operation and Maintenance Manual for any changes since the date this manual was published. Refer to the Absorber Service Manual if the absorber fails any of these tests.

9. Turn the Bag/APL-Ventilator switch to the Ventilator position.

10. Attach a breathing bag to the Bag Arm and a patient circuit to the inhalation and exhalation ports.

⚠ **WARNING: When occluding the breathing system for test purposes, do not use any object small enough to slip completely into the system. Objects in the breathing system can interrupt or disrupt the delivery of breathing-system gases, possibly resulting in injury to the patient. Before using the breathing system on a patient, always check the breathing system components for foreign objects.**

11. Occlude the "Y" connector of the patient circuit.

12. Press the flush button. There should be no filling of the breathing bag. Any movement indicates unacceptable cross leakage between the Bag/APL and the Ventilator circuits.

13. Turn the Bag/APL-Ventilator switch to the Bag/APL position.

14. Remove the breathing bag and occlude the breathing bag port.

15. Close the APL valve by turning the APL valve knob fully clockwise.

16. Set the anesthesia machine for an O_2 flow of 200 mL/min delivered to the breathing system.

17. Watch the absorber pressure gauge. Press the flush button briefly to pressurize the breathing system to just under 40 cm H_2O. Continue to watch the pressure gauge. The 200 mL/min O_2 flow from the gas machine should raise the breathing system pressure to at least 40 cm H_2O. The leakage of the Bag/APL circuit is then less than or equal to 200 mL/min at 40 cm H_2O.

18. Increase the O_2 flow to 3.0 L/min. The pressure on the absorber's pressure gauge should increase to between 66 and 78 cm H_2O. This checks the maximum pressure limit in the Bag/APL circuit.

19. Slowly turn the APL valve knob counter-clockwise in one-quarter turn increments. The pressure should drop, then stabilize, with each turn of the knob. This checks the adjustable pressure limiting function of the valve.

20. The APL valve knob should now be fully counter-clockwise. Remove the occlusion from the breathing bag port.

21. Connect a breathing bag to the bag arm on the absorber. Use the breathing bag for the next case. The 3.0 L/min flow should fill the breathing bag to its nominal capacity. the pressure should stabilize between 1.0 cm H_2O and 7.0 cm H_2O. This ensures that the breathing bag will fill for spontaneous breathing with the APL valve completely open, but will limit the positive pressure in the circuit.

22. Rotate the APL valve knob one half turn clockwise.

23. Press the flush button to fill the breathing bag.

24. Squeeze and release the breathing bag in succession and observe the check valve discs. They should flutter with each contraction and expansion of the breathing bag.

C. 7800 Bellows Checks (Retention, Pressure Relief, Leak Test)

Note: Skip this section if the system uses a 7750 Ventilator.

These checks are taken from the Ohmeda 7800 Ventilator Operation and Maintenance Manuals. Refer to the Ventilator Operation and Maintenance Manual for any changes since the date this manual was published. Refer to the Ventilator Service Manual if the system fails any of these tests.

25. Occlude the patient end—at the "Y" connector—of the patient circuit.

⚠ **WARNING: When occluding the breathing system for test purposes, do not use any object small enough to slip completely into the system. Objects in the breathing system can interrupt or disrupt the delivery of breathing-system gases, possibly resulting in injury to the patient. Before using the breathing system on a patient, always check the breathing system components for foreign objects.**

26. If applicable, turn the breathing system's Bag/APL-Ventilator switch to the Ventilator position.

27. Watch the breathing system's pressure gauge. Press the O_2 flush button to fill the bellows. When full the bellows may swell, but it must remained installed on the bellows base. The pressure gauge reading must not exceed 15 cm H_2O.

28. Examine the bellows and confirm that it is undamaged.

29. Release the flush button.

30. Watch the pressure gauge and adjust the O_2 flow from 200 ml per minute to 10 liters per minute and back. The pressure reading must stay within the range of 1.0 cm H_2O to 5.0 cm H_2O. This tests the bellows assembly's pressure relief valve.

31. Shut off fresh gas flow, switch "OFF" the anesthesia machine. The bellows must not drop more than 100 ml per minute. If the bellows drops more than 100 ml per minute, either the bellows is leaking or the pressure relief valve is not functioning properly.

D. Bellows (ABA) Pressure Leak Test

Note: Skip this section if the system uses a 7750 Ventilator.

ABA refers to the autoclavable bellows assembly. For non autoclavable bellows, use the same procedure with an acceptable leak rate of 300 mL/min at 60 cm H_2O.

Check the ABA for leakage under pressure (250 mL/min at 60 cm H_2O) using the breathing system pressure gauge and the anesthesia machine flowmeters. Breathing system leakage is determined prior to connecting the ABA. Repeating the test after the ABA is connected determines the leakage of the ABA unit.

Note: This check is taken from the Ohmeda Ventilator Operation and Maintenance Manual. Refer to the Ventilator Operation and Maintenance Manual or the Autoclavable Bellows Assembly (ABA) Addendum for any changes since the date this manual was published. Refer to the Ventilator Service Manual if the system fails any of these tests.

Breathing System Leakage -- Bellows Out Of Circuit

32. Set the breathing system for the bag mode using the Bag/APL-Ventilator switch if present. Remove the breathing bag and occlude the bag port. Remove any gas sampling adapters or tightly cap off connections.

33. Turn the APL valve fully closed. Turn "OFF" any other device in the circuit that may leak in this mode at a pressure of 60 cm H_2O. Consult your breathing system operation manual.

34. Turn "ON" the anesthesia machine and adjust O_2 to its minimum flow. Turn "OFF" all other gases.

35. Occlude the patient connection port, e.g. the "Y" piece, while you watch the pressure gauge. Ignore or silence any alarms that may occur during the test. But, quickly unplug the port if the pressure approaches 100 cm H_2O.

36. Using the O_2 flow control valve, increase the O_2 flow rate until the pressure approaches 60 cm H_2O. Then quickly reduce the flow rate to match the leak rate so that pressure is maintained at 60 cm H_2O. The pressure will continue to rise if the leak rate of the breathing system is less than the minimum O_2 flowmeter setting.

37. Remove the occlusion from the patient connection port and note the O_2 flowmeter reading as the breathing system's leak rate. Return the O_2 flow to its minimum setting and remove any occlusions made during the test.

Breathing System Leakage -- Bellows Included In Circuit

38. Set the breathing system for the ventilator mode so the ABA is in the circuit. Disconnect the drive gas tube from the port labeled "Connect to bellows assembly inlet," located on the rear of the ventilator control module, and occlude the disconnected tube.

39. Repeat previous steps 35, 36, and 37.

40. Adding the ABA to the circuit should not increase the leak rate noted in step 37 by more than an additional 250 mL/min. Continue with step 42 if the leakage is acceptable.

41. An unacceptable leak requires repair, do not use the ABA until repairs are made.

    Note: the housing seal, the pressure relief valve, base and tubing are the most likely areas to leak. Systematically replace these parts until the leak is corrected.

42. Remove the occlusion from the drive gas tube and connect it to the ventilator. Correct any alterations and remove any occlusions made to the breathing system during this test.

E. Check Monitor and Ventilator Alarms

Continue with this section only if the Excel system includes a 7750 or a 7800 Ventilator. Always complete the required ventilator and monitor check-out procedures before returning the Excel to use.

43. Set ventilator controls as follows:

    For a 7800 ventilator:
    Tidal Volume: 500 ml
    Rate: 10 breaths/min
    Inspiratory Flow: 100 L/min (maximum)
    Mechanical Ventilation: "ON."
    Sigh: If applicable, set to "OFF" on the Setup page
    Inspiratory Pause: OFF
    Low Min Vol: 0.0 L/min
    Low O_2: 18%
    High O_2: 00%
    Inspiratory Pressure Limit: 100 cm H_2O
    Sustained Pressure Limit: 30 cm H_2O (fixed by high pressure limit)
    Reverse Flow: "ON" (setup page)

For a 7750 ventilator:
Power Switch: "ON." Mechanical Ventilation: "ON." Tidal Volume: Mid Range
Inspiratory Flow: Mid Range (I:E Ratio not inverse, 1:1, 1:2, 1:3 etc.)
Respiratory Monitoring: "ON." Low Min Vol: 0.0 L/min
Frequency: 1 B/min
Inspiratory Pressure Limit: 100 cm H_2O
Sustained Pressure Limit: fixed by high pressure limit
Low O_2: 18%

44. Set the system master switch to "ON" and adjust the O_2 flow to 2 L/min. Turn all other flow controls fully clockwise (minimum flow).

    Note: If the facility's pipeline supply cannot support the flow requirements in the next step, repeat the step using a cylinder supply for the ventilator drive gas (air or O_2).

45. Wait one minute. Then, check that low drive gas pressure alarms do not trigger:

    - On a 7750, the Gas Fail LED does not light up.
    - On a 7800, a low gas supply pressure message does not appear in the ventilator display

46. Set the inspiratory flow to mid range.

47. Check that ventilator volume and rate readings agree with control settings and that the O_2 concentration is 100%.

48. Check that you cannot set the low O_2 alarm below 18% without triggering an alarm.

49. Set the Low O_2 limit to 50%, expose the sensor to room air and check that a low O_2 alarm activates. Return the low O_2 alarm limit to 18%.

50. Plug the O_2 sensor back into the breathing circuit.

51. Remove the volume sensor clip from the volume sensor cartridge and check that the appropriate alarm triggers:
    - 7800 Ventilator: Apnea alarm after 30 seconds
    - 7750 Ventilator: Low Minute Volume (MV)

52. Remove the test lung and check that a low pressure alarm triggers.

53. Occlude the "Y" piece and depress the flush button. Check that a high pressure alarm triggers. Reconnect the test lung.

54. On the 7800 ventilator, test the following alarms:

- Reverse flow: Install the volume sensor clip with the arrows pointing away from the absorber (backwards) and check that a reverse flow alarm triggers. Install the volume sensor clip with the arrows pointing towards the absorber to clear the alarm.
- High O_2 concentration: Set the high O_2 limit to 50%. Check that a high O_2 alarm activates. Return the high O_2 alarm limit to 100%.
- Low minute volume: Adjust the low minute volume alarm to the highest allowed value and check that the low minute volume alarm triggers. Adjust the low minute volume alarm to 0.0 L/min and check that the alarm cancels.

55. Disconnect all pipeline hoses from the wall and the Excel, close all cylinder valves, unplug the power cord and set the system master switch to "OFF."

Notes

4/Calibration and Adjustments

Important:

- Calibration and adjustment procedures are listed in order of performance.
- Depending on the repair, not all procedures are required.
- A list at the start of each procedure tells you if you can skip that procedure.
- A list at the end of each procedure directs you to the next required procedure.
- Individual procedures may also be used as diagnostic tests.
- After completing the adjustments in this section, always complete the check-out procedure (Sections 3.1 and 3.2).

4.1 Adjusting and Testing Primary Regulators

Complete this procedure before reassembling if you repaired or replaced a:

- Primary regulator

⚠WARNING: Follow the appropriate agent evacuation and collection procedures as specified by local requirements. Use the hospital gas evacuation system whenever possible.

1. Set the system master switch to "OFF."
2. Check that all pipeline hoses are disconnected from the Excel and the wall.
3. For Excels with Mini-Schrader power outlets: if only the air or O_2 primary regulator requires testing, connect the test fixture to the air or O_2 power outlet and skip to step 8. Refer to Section 6.7, Test Fixtures, for test fixture information.

   For Excels without Mini-Schrader power outlets, continue with step 4.
4. Remove all cylinders.
5. Remove the gas supply cover (Figure 4-1).
6. Disconnect the elbow fitting from the gas supply outlet.
7. Make test connections (Figure 4-2). Refer to Section 6.7, Test Fixtures, for test fixture information.

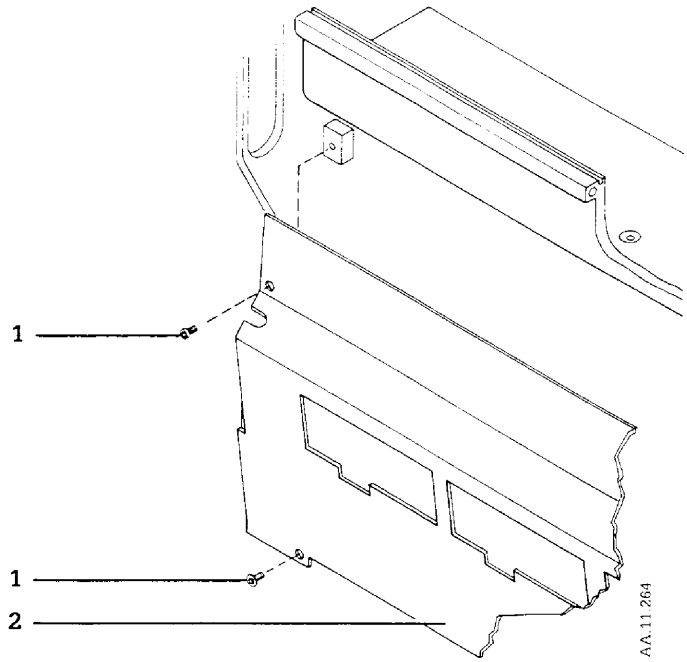

1. Screws M4x6
2. Gas Supply Cover

Figure 4-1 Removing the gas supply cover

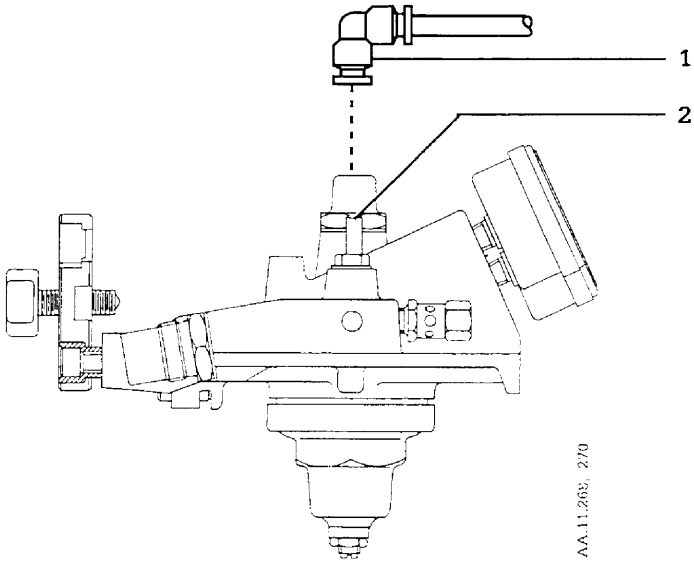

1. Disconnect Tube
2. Connect the Test Device to the Output

Figure 4-2 Primary regulator test connections

8. Install a cylinder and test the primary regulator. If a reserve cylinder is present for the gas in question, test one primary regulator at a time:

⚠ **WARNING: Wear safety glasses while the test fixture is connected to a regulator test port (on flowmeter module) or primary regulator output.**

a. Check that a cylinder wrench is available.

b. Slowly open the cylinder valve. If there is a backup cylinder, make sure that only one cylinder valve is open.

c. Check regulator output. Read the expected regulator output from the following table. Use the cylinder gauge reading that is closest to the actual value. Do not block the orifice in the test fixture.

Table 1- Primary Regulator settings for Austrian, German (N_2O and O_2), ISO (N_2O, O_2, and air), Scandinavian, and Swiss Excels

Cylinder Gauge Reading	Regulator Output
138 Bar (2000 psig)	390±7 kPa (56.5±1 psig)
104 Bar (1500 psig)	380±7 kPa (55.0±1 psig)
69 Bar (1000 psig)	370±7 kPa (53.5±1 psig)
52 Bar (750 psig)	366±7 kPa (53.0±1 psig)

Table 2 - Primary Regulator settings for Australian, French, and German Reserve O_2 Regulator (German air/O_2 supply)

Cylinder Gauge Reading	Regulator Output
138 Bar (2000 psig)	324±7 kPa (47.0±1 psig)
104 Bar (1500 psig)	314±7 kPa (45.5±1 psig)
69 Bar (1000 psig)	304±7 kPa (44.0±1 psig)
52 Bar (750 psig)	297±7 kPa (43.0±1 psig)

Table 3 - Primary Regulator settings for CO_2 Regulators

Cylinder Gauge Reading	Regulator Output
55 Bar (800 psig)	207±7 kPa (30±1 psig)

9. Check for leakage across the regulator seat. Block the 0.025 inch orifice (in the test fixture). If the pressure rise exceeds 48 kPa (7 psig), the regulator stem or seat are leaking. Replace the gas supply module. Refer to Section 5.12, Servicing Gas Supply Modules.

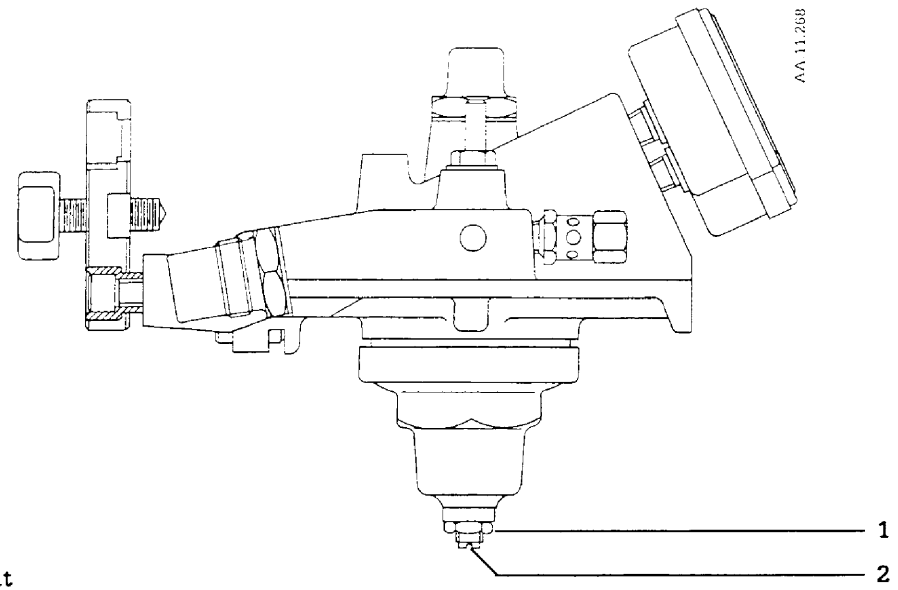

1. Lock Nut
2. Adjustment Screw

Figure 4-3 Primary regulator adjustments

10. If regulator adjustment is required:

    a. Locate the adjustment holes in the pan. One is located under each regulator.

    b. Release the locknut. Use a 13 mm hex nut driver or similar tool.

    c. Turn the adjustment screw until the test gauge reading (orifice open) is within the allowed range (Step 8).

    d. Tighten the locknut on the adjustment screw.

    e. Check that the test gauge reading is correct.

11. Repeat step 9.

12. Close the cylinder valve, disconnect the test device and reconnect the gas supply output.

13. Repeat steps 6 through 12 for each primary regulator that requires testing.

14. Install the gas supply cover and the cylinders.

15. Complete Sections:

    3.1, Excel Tests
    3.2, System Check-Out

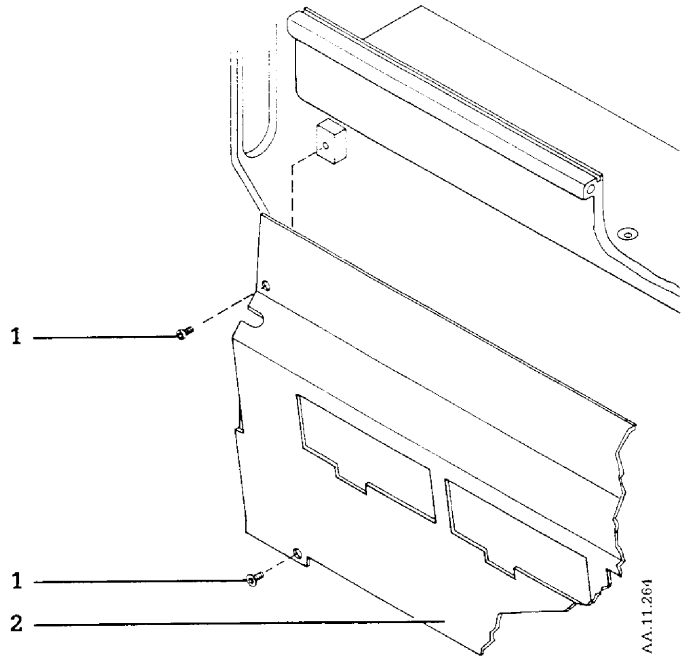

1. Screws M4x6
2. Gas Supply Cover

Figure 4-4 Installing the gas supply cover

4.2 Adjusting the Low O_2 Alarm

Complete this procedure before reassembling if you have repaired or replaced:

- Low O_2 pressure alarm

A. Check Calibration

Skip this section and start at Section B, Adjustment Procedure, if the check-out procedure or a similar test indicates a need for adjustment.

1. For Excels with Mini-Schrader power outlets: connect the test fixture and gauge to the O_2 power outlet. Refer to Section 6.7, Test Fixtures, for test fixture information.

   For Excels without Mini-Schrader power outlets: remove all cylinders; remove the gas supply cover (Figure 4-1); disconnect the elbow fitting from the gas supply outlet; and make test connections (Figure 4-2). Transfer the O_2 tubing from the elbow fitting to the test fixture. Refer to Section 6.7, Test Fixtures, for test fixture information.

2. Set the system master switch to "ON."

3. Slowly open an O_2 cylinder valve.

4. Occlude the orifice on the test fixture.

5. Close all O_2 cylinder valves.

6. Watch the test gauge. Check that the low O_2 pressure alarm sounds when the test gauge reading is approximately 186 to 228 kPa (27 to 33 psig).

7. Check that the pneumatic alarm continues for at least seven seconds.

8. If the alarm fails to sound within the allowed range or if the alarm sounds for less than seven seconds, adjust the alarm (Section 4.2.B).

9. If no adjustment is required, complete Sections:

   3.1, Excel Tests
   3.2, System Check-Out

B. Adjustment Procedure

Important: This procedure requires a 207 kPa (30 psig) O_2 supply. Either adjust the O_2 primary regulator to deliver the required pressure, or connect an externally regulated supply to the O_2 pipeline inlet.

1. Set the system master switch to "OFF."

2. Remove the tray top.

3. Disconnect all pipeline hoses from the Excel and the wall, except the 207 kPa (30 psig) O_2 supply (if applicable).

4. If an external 207 kPa (30 psig) O_2 supply is not available, adjust the primary O_2 regulator to 207 kPa (30 psig). Refer to Section 4.1, Adjusting and Testing Primary Regulators.

5. Close all cylinder valves and set the system master switch to "OFF."

6. For Excels with Mini-Schrader power outlets: connect the test fixture and gauge to the O_2 power outlet. Refer to Section 6.7, Test Fixtures, for test fixture information.

   For Excels without Mini-Schrader power outlets: remove all cylinders; remove the gas supply cover (Figure 4-1); disconnect the elbow fitting from the gas supply outlet; and make test connections (Figure 4-2). Transfer the O_2 tubing from the elbow fitting to the test fixture. Refer to Section 6.7, Test Fixtures, for test fixture information.

7. Set the system master switch to "ON." If you readjusted the primary regulator for the 207 kPa (30 psig) supply, also open an O_2 cylinder.

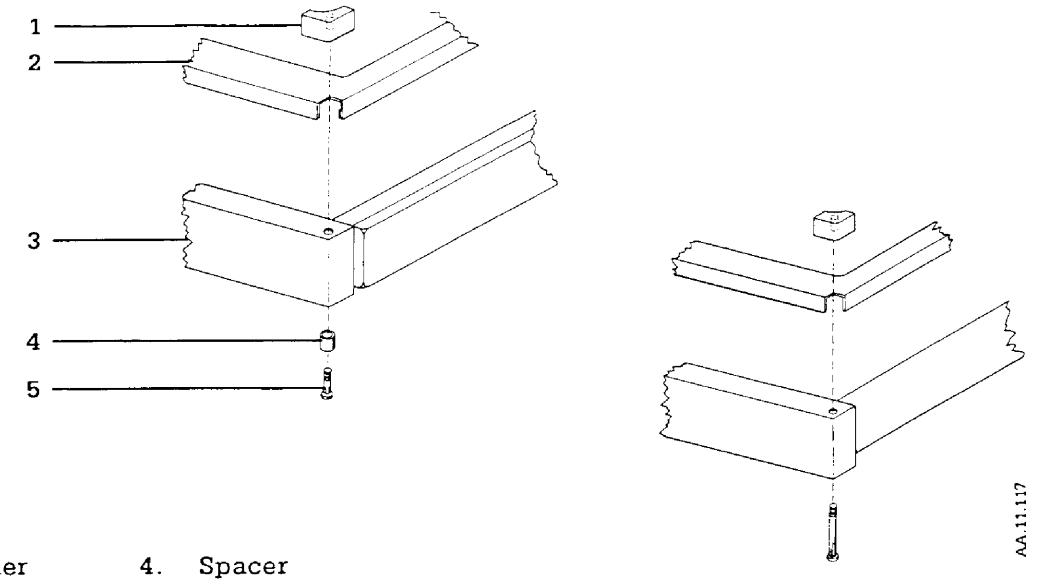

1. Retainer
2. Tray Top
3. Excel Frame
4. Spacer
5. Bolt

Figure 4-5 Removing the tray top

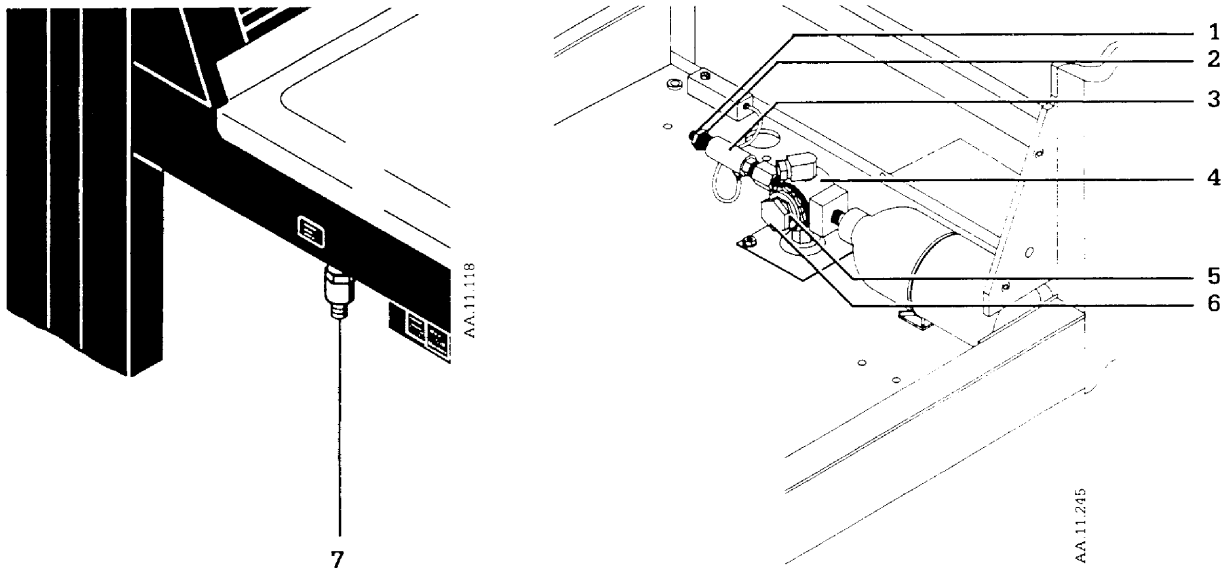

1. Adjustment Screw
2. Locknut (Flow Regulator)
3. Flow Regulator
4. Alarm Regulator
5. Locknut
6. Adjustment Knob (Alarm Regulator)
7. Mini-Schrader O_2 Power Outlet

Figure 4-6 Low O_2 pressure alarm adjustment

8. Loosen the lock-nut on the flow regulator adjustment screw.

⚠ **CAUTION: Do not force (over tighten) the flow regulator adjustment screw.**

9. Turn the flow regulator adjustment screw all the way in. Then, back it out three full turns.

10. Release the lock-nut on the alarm regulator adjustment knob.

11. Turn the alarm regulator adjustment knob in all the way.

12. With the system master switch set to "ON," the alarm should sound continuously.

13. Adjust the flow regulator:

    a. Turn out the adjustment screw until the alarm just stops.

    b. Turn in the adjustment screw one half turn. The alarm should sound continuously.

    c. Tighten the lock nut on the adjustment screw.

14. Adjust the alarm regulator:

    a. Turn out the adjustment knob until the alarm just stops.

    b. Turn in the adjustment knob until the alarm just starts.

    c. Tighten the lock nut on the adjustment knob

15. If necessary, adjust the O_2 primary regulator. Refer to Section 4.1, Adjusting and Testing Primary Regulators.

16. Test the alarm system (Section 4.2.A).

17. Set the system master switch to "OFF."

18. Remove the test fixture and reconnect tubing as required.

19. Install the tray top.

20. Complete Sections:

    3.1, Excel Tests
    3.2, System Check-Out

4.3 Adjusting and Testing the N_2O Secondary Regulator

Important: Do not use this section to adjust the O_2 regulator. Adjusting the O_2 secondary regulator is part of Section 4.4, Adjusting the N_2O and the O_2 Needle Valves and Link System.

Complete this section if the check-out procedure or a similar test indicates that adjustment is required or if you have serviced the:

- N_2O Secondary regulator

Note: If you rebuilt the secondary regulator, reset it to the same output pressure as before to minimize linkage adjustment.

⚠WARNING: Follow the appropriate agent evacuation and collection procedures as specified by local requirements. Use the hospital gas evacuation system whenever possible.

1. Set the system master switch to "OFF."

2. Remove the access panel covering the secondary regulator test ports.

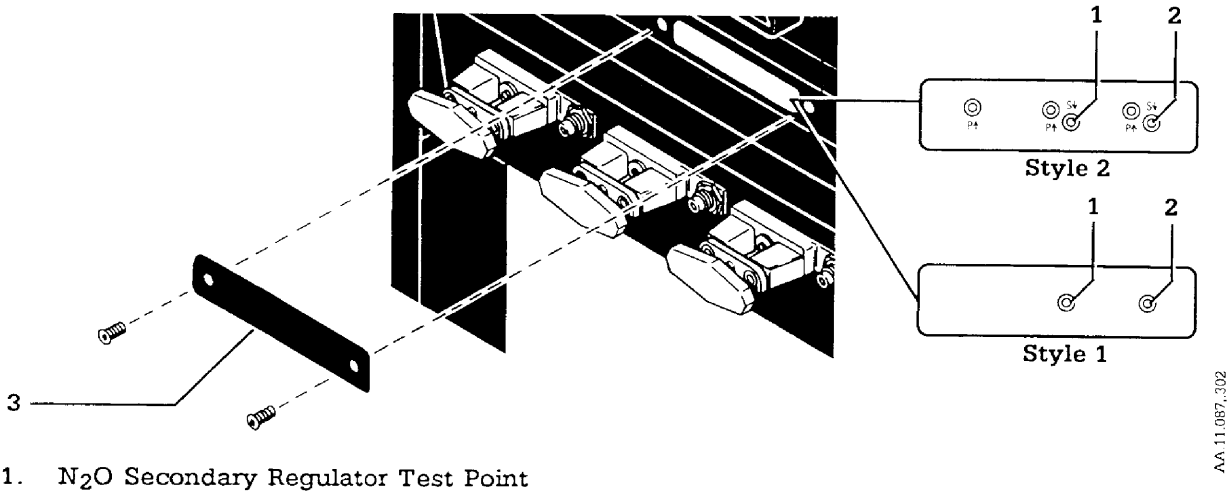

1. N_2O Secondary Regulator Test Point
2. O_2 Secondary Regulator Test Point
3. Access Panel

Figure 4-7 Accessing the secondary regulator test points

3. Assemble the test fixture. Refer to Section 6.7, Test Fixtures, for test fixture information.

4. Connect the test fixture to the test fitting.

⚠ **WARNING: Wear safety glasses while the test fixture is connected to a regulator test port (on flowmeter module) or primary regulator output.**

5. Supply O_2 and N_2O to the Excel (open cylinder valves or connect pipeline supplies).

6. Set the system master switch to "ON."

   Note: The Air/N_2O selector switch must be set to N_2O if present.

7. Apply leak detection solution to the test connection to check for leaks.

8. Adjust the N_2O flow to 2 L/min. Occlude the orifice on the test fixture and check the gauge reading:

Excel Model	Allowed Range N_2O Secondary Regulator
French	200±7 kPa (29±1 psig)
All others	262.2±3.5 kPa (38±0.5 psig)

9. If the reading is outside the allowed range:

   - Remove the rear flowmeter panel.
   - Remove the label from the N_2O secondary regulator.
   - Occlude the test fixture orifice and turn the N_2O regulator adjustment screw until the reading is within the allowed range (step 8).

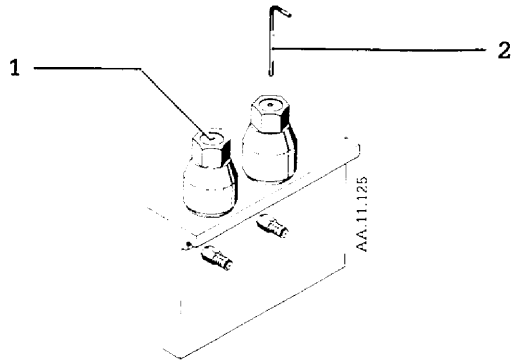

1. Adjustment Screw
3. 3 mm Hex Key Wrench

Figure 4-8 Secondary regulator adjustments

10. If you have adjusted the N_2O secondary regulator:

    a. Set the N_2O flow to 10 L/min. Check that you cannot turn the N_2O flow control more than one additional turn counter-clockwise.

b. If minimum or maximum N_2O flows are out of range, refer to Section 4.4, Adjusting the N_2O and the O_2 Needle Valves and Link System.

c. If minimum and maximum N_2O flows are acceptable, disconnect the test fixture.

11. Check link system tracking:

- Adjust only the N_2O flow control.
- Start with the N_2O and O_2 flow controls at the minimum setting.
- Increase the N_2O flow as specified in the table and make sure that the O_2 flow is in the allowed range.
- If you overshoot a setting, turn the O_2 flow control clockwise until the N_2O flow decreases to the previous level and continue with this step.

Table Step 11- Link proportioning system set to 25%

Set N_2O flow to:	O_2 flow must read:
0.9 L/min	0.24 to 0.36 L/min
1.5 L/min	0.40 to 0.61 L/min
3.0 L/min	0.79 to 1.22 L/min
6.0 L/min	1.58 to 2.44 L/min
9.0 L/min	2.37 to 3.66 L/min

Table Step 11- Link proportioning system set to 30% (France)

Set N_2O flow to:	O_2 flow must read:
0.9 L/min	0.31 to 0.46 L/min
1.5 L/min	0.53 to 0.77 L/min
3.0 L/min	1.05 to 1.54 L/min
6.0 L/min	2.10 to 3.10 L/min
9.0 L/min	3.15 to 4.61 L/min

Note: If necessary, refer to Section 4.4, Adjusting the N_2O and the O_2 Needle Valves and Link System.

12. Set the system master switch to "OFF" and close all cylinder valves.

13. Install the label on the N_2O secondary regulator.

14. Install the access and the rear flowmeter panels.

15. Complete Sections:

    3.1, Excel Tests
    3.2, System Check-Out

4.4 Adjusting the N_2O and the O_2 Needle Valves and Link System

⚠WARNING: Follow the appropriate agent evacuation and collection procedures as specified by local requirements. Use the hospital gas evacuation system whenever possible.

Important: Each time you do this procedure you must replace the:

- Stop screws inside N_2O and O_2 knobs (minimum flow)
- Set screws used to attach flow control knobs

Make sure that you have new set and stop screws before starting this procedure. You may also have to replace the flow control labels if they are damaged in the process. Refer to Section 6, Illustrated Parts, for label and set screw stock numbers.

Proceed directly to the adjustment procedure if you have serviced the:

- Secondary O_2 regulator
- N_2O or O_2 needle valves (includes knob removal)

A. Check Calibration

Skip this section and continue with the actual adjustment (Section 4.4.B) if the check-out procedure or similar test results indicate adjustment is required, or if you are replacing a N_2O or O_2 needle valve.

1. Connect a gas supply and set the system master switch to "ON."

   Note: The Air/N_2O selector switch must be set to N_2O if present.

2. Check the maximum O_2 Flow:

   a. Adjust the O_2 flow to 10 L/min.

   b. On French Excels, check that you can turn the O_2 flow control between two and a half and three and a half additional turns counter-clockwise.

      On all other Excels, check that you cannot turn the O_2 flow control more than two additional turns counter-clockwise.

   Note: If this step fails, begin the adjustment procedure (Section 4.4.B) at step 1.

3. Check the maximum N_2O Flow:

   a. Adjust the N_2O flow to 10 L/min.

b. Check that you cannot turn the N_2O flow control more than one additional turn counter-clockwise.

Note: If this step fails, begin the adjustment procedure (Section 4.4.B) at step 1.

4. Turn all flow controls clockwise and check the minimum flows:

   O_2 minimum flow: 200±25 mL/min
   N_2O minimum flow: 0 mL/min (float rests on bottom and does not spin)

   Note: If this step fails, continue with steps 5 through 8 in this section to determine which adjustments are required. If the maximum flows and tracking are acceptable, remove the flowmeter shield and begin the adjustment procedure (Section 4.4.B) at step 6.

5. Check that you can increase the O_2 flow to 10 L/min without changing the N_2O flow.

   Note: If the N_2O flow changes, remove the flowmeter shield and adjust the height of the collar stop screw so that it does not catch on the back side of the kick-in tab. Refer to step 45, adjusting the height of the collar stop screw, in the adjustment procedure (Section 4.4.B). Then, repeat this section (Check Calibration).

6. Check that decreasing the N_2O flow does not change the O_2 flow.

   Note: If the N_2O flow changes, remove the flowmeter shield and adjust the height of the collar stop screw so that it does not catch on the back side of the kick-in tab. Refer to step 45, adjusting the height of the collar stop screw, in the adjustment procedure (Section 4.4.B). Then, repeat this section (Check Calibration).

7. Test link system tracking. Observe the following precautions:
   - Adjust only the N_2O flow control.
   - Start with the N_2O and O_2 flow controls at the minimum setting.
   - Increase the N_2O flow as specified in the table and make sure that the O_2 flow is in the allowed range.
   - If you overshoot a setting, turn the O_2 flow control clockwise until the N_2O flow decreases to the previous level and continue with this step.

Table Step 7- Link proportioning system set to 25%

Set the N_2O flow to:	The O_2 flow must read:
0.9 L/min	0.24 to 0.36 L/min
1.5 L/min	0.40 to 0.61 L/min
3.0 L/min	0.79 to 1.22 L/min

Note: If O_2 flows are out of range at low N_2O flows, the kick-in point may need to be adjusted. Locate the kick-in point on your system. Then, turn the N_2O and O_2 flow controls completely clockwise, remove the O_2 knob without changing the valve setting, install new set screws in the knob, and start the adjustment procedure (Section 4.4.B) at step 36. Use the current kick-in point as a guide to set the new kick-in point.

Set the N_2O flow to:	The O_2 flow must read:
6.0 L/min	1.58 to 2.44 L/min
9.0 L/min	2.37 to 3.66 L/min

Note: If O_2 flows are consistently too high or too low, begin the adjustment procedure (Section 4.4.B) at step 1.

Table Step 7 - Link proportioning system set to 30% (France)

Set the N_2O flow to:	The O_2 flow must read:
0.9 L/min	0.31 to 0.55 L/min
1.5 L/min	0.50 to 0.76 L/min
3.0 L/min	1.04 to 1.55 L/min

Note: If O_2 flows are out of range at low N_2O flows, the kick-in point may need to be adjusted. Locate the kick-in point on your system. Then, turn the N_2O and O_2 flow controls completely clockwise, remove the O_2 knob without changing the valve setting, install new set screws in the knob, and start the adjustment procedure (Section 4.4.B) at step 36. Use the current kick-in point as a guide to set the new kick-in point.

Set N_2O flow to:	O_2 flow must read:
6.0 L/min	2.07 to 3.13 L/min
9.0 L/min	3.09 to 4.71 L/min

Note: If O_2 flows are consistently too high or too low, begin the adjustment procedure (Section 4.4.B) at step 1.

8. If no adjustments are required, complete Sections:

   3.1, Excel Tests
   3.2, System Check-Out

B. Adjustment Procedure

1. Set the system master switch to "OFF."
2. Remove the flowmeter shield.
3. Set the system master switch to "ON" and connect O_2 and N_2O supplies.

   Note: The Air/N_2O selector switch must be set to N_2O if present.

4. Adjust the maximum O_2 flow:

   a. Turn the O_2 flow control completely counter-clockwise.

   b. On French Excels, turn the flow control two and a half to three and a half turns clockwise.

   On all other Excels, turn the flow control one to two turns clockwise.

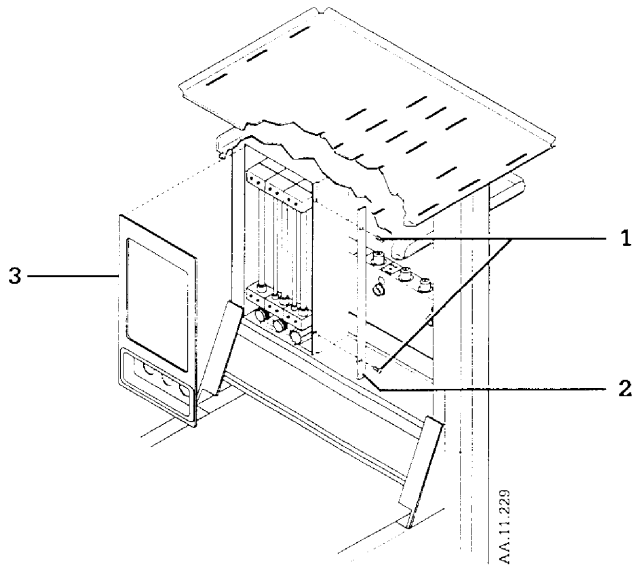

1. Screws
2. Retainer
3. Flowmeter Shield

Figure 4-9 Removing flowmeter shield

   c. Remove the rear flowmeter panel and the access panel covering the secondary regulator test points.

   d. Remove the label from the secondary O_2 regulator.

   e. Adjust the secondary O_2 regulator until the O_2 flow reads 10 L/min.

⚠ **WARNING: Wear safety glasses while the test fixture is connected to a regulator test port (on flowmeter module) or primary regulator output.**

f. Adjust the O_2 flow to 2 L/min. Connect the test fixture and check that the O_2 secondary regulator pressure is:

Excel Model	Secondary O_2 Regulator Pressure
French	156 ±13 kPa (22.6 ±1.9 psig)
All others	143.2±25.9 kPa (20.75±3.75 psig)

g. If the pressure is out of range, repeat this step. Vary how far clockwise you turn the flow control in step b. Do not exceed the turn limit.

h. Reapply the secondary O_2 regulator label and install the flowmeter rear panel.

5. Repeat Section 4.4.A, Check Calibration, to determine if you need to continue this procedure.

6. Set the system master switch to "OFF."

7. Remove and discard the three set screws that attach the O_2 flow control knob and remove the knob.

8. Carefully remove the label from the O_2 flow control knob. Save the label for reuse.

9. Remove the stop screw from inside the O_2 flow control knob. Remove all traces of Loctite®. Then, apply Loctite 242 (or the approved equivalent) to the stop screw and install it.

   Note: To adjust only the minimum O_2 flow, complete steps 17-20 (adjust O_2 flow control only), 22 and 33 through the end of this procedure.

10. Loosen the O_2 needle valve (clockwise direction).

11. Remove and discard the three set screws that attach the N_2O flow control knob. Remove the knob, the O_2 needle valve, and the link chain as an assembly.

12. Carefully remove the label from the N_2O flow control knob. Save the label for reuse.

13. Remove the stop screw from inside the N_2O flow control knob. Remove all traces of Loctite. Then, apply Loctite 242 (or the approved equivalent) to the stop screw and install it.

® Loctite is a registered trademark of the Loctite Corp.

14. Make sure that the O_2 sprocket is screwed onto the O_2 needle valve with the kick-in tab pointing out.

15. Lightly coat the needle valve o-rings with Krytox® (approved O_2 service lubricant). Do not apply Krytox to the O_2 sprocket threads on the O_2 needle valve.

⚠ **WARNING: Failure to properly torque flow control components may result in incorrect proportioning and hypoxic mixtures.**

16. Screw the N_2O and the O_2 needle valves into the flowmeter module. Torque the needle valves to 69 Kg-cm (60 lb-in). Do not install the flow control knobs or the chain.

17. Set the system master switch to "ON" and supply N_2O and O_2 to the Excel.

⚠ **CAUTION: Always start the N_2O zero adjustment with a small flow through the N_2O needle valve. This helps avoid adjusting the N_2O needle valve clockwise below zero flow, which will permanently damage the valve.**

18. Start with a small flow through the N_2O needle valve. Adjust the needle valve stems for minimum flows (0 l/min for N_2O; 200 ± 25 mL/min for O_2) and note the position of the stop on the needle valve body.

    Note: At minimum flow, the N_2O float rests on the bottom of the flowtube and does not spin.

19. Check that there is absolutely no N_2O flow. Remove the flowmeter rear panel, disconnect the nylon tube between N_2O flowtubes and apply a leak detection solution to the end of the tube. Reconnect the tube and install the flowmeter rear panel after checking zero flow.

20. Locate the stop screw inside both knobs. Test fit the knobs to check that the stop screw will catch the needle valve body stop:

    a. Check that you have removed the set screws.

    b. Slide the knob all the way onto the shaft.

    c. Turn the knob clockwise and check that the stop screw catches on the body stop (Figure 4-10).

    d. Turn in the stop screw if it does not catch, and repeat step c.

    e. Remove the knobs.

® Krytox is a registered trademark of Dupont de Nemours E.I. & Company Inc.

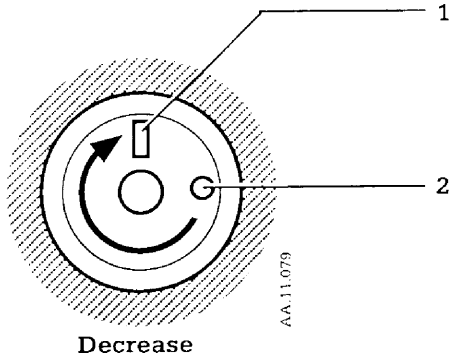

1. Body Stop
2. Stop Screw

Figure 4-10 Adjusting the stop screw

21. Set the system master switch to "OFF" and remove the O_2 needle valve.

22. Loosely thread the new set screws into the N_2O and O_2 flow control knobs. Make sure that the set screws will not engage the shaft.

    Important: Do not rotate the shaft. If you rotate the shaft, you have disturbed the minimum stop position and must repeat step 18.

⚠ **WARNING: Failure to properly torque flow control components may result in incorrect proportioning and hypoxic mixtures.**

23. Install the O_2 needle valve - link chain - and N_2O knob together. Torque the O_2 needle valve to 69 Kg-cm (60 lb-in). Do not secure the N_2O knob.

    Note: The O_2 needle valve has left hand threads, turn it counter-clockwise to screw in the valve.

24. Pull the N_2O knob back so the stop screw does not contact the stop and turn the knob counter-clockwise until the O_2 sprocket touches the shoulder of the O_2 needle valve.

25. Turn the N_2O knob five turns clockwise.

26. Push in the N_2O knob and engage the stop screw against the body stop. The direction that you turn the knob depends on the relative position of the stop screw and the body stop. Refer to Figure 4-11.

    a. Turn the knob clockwise up to one half turn. Stop if the stops make contact.

b. If you do not find the body stop in one half turn, turn the knob counter-clockwise until the stops make contact. This contact is on the wrong side of the body stop. Pull out the knob far enough to clear the body stop and turn the knob counter-clockwise over the body stop. Then, push in the knob and turn it clockwise until the stops make contact.

c. Evenly tighten the three set screws that attach the N_2O flow control knob enough to turn the needle valve shaft.

27. Turn the gas on and check that there is minimum flow through the needle valves, 0 L/min for N_2O (float rests on bottom without spinning) and 200 ± 25 mL/min for O_2.

28. Turn the N_2O flow control one turn counter-clockwise and check that the stop screw rubs against or contacts the stop. If necessary, slightly turn in the stop screw, turn the flow control clockwise one turn and repeat this step.

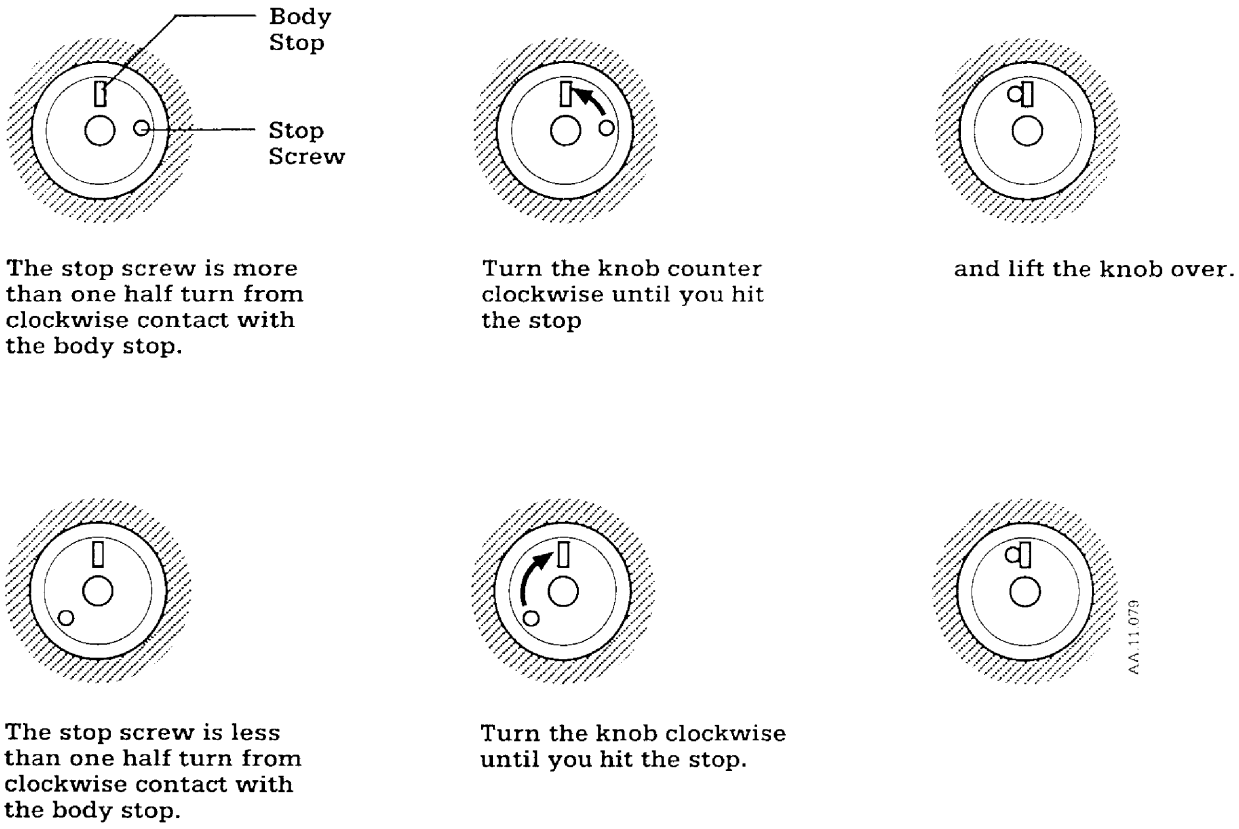

Figure 4-11 Finding the minimum stop

⚠ **CAUTION: It is absolutely essential that there is paper thin clearance between the top of the needle valve body stop and the stop screw on the first counter-clockwise turn. Otherwise, the stop screw has insufficient contact with the body stop when the knob is set to minimum flow.**

29. Back off the stop screw to just eliminate the rubbing. Then, turn the N_2O flow control completely clockwise and check that the stop screw still hits the stop.

30. Rotate the N_2O flow control one and a half turns counter-clockwise to check that the stop screw clears the body stop.

31. Set the N_2O flow to 10 L/min. Make sure that you cannot turn the N_2O flow control more than one turn counter-clockwise.

    Note: If this step fails, turn the N_2O and the O_2 flow controls completely clockwise (minimum flow), loosen the N_2O knob set screws, and repeat steps 24 through 31. In step 25, vary the number of turns between the minimum and the maximum N_2O flow.

⚠ **WARNING: Failure to properly torque flow control components may result in incorrect proportioning and hypoxic mixtures.**

32. Torque the N_2O flow control knob set screws to 2.3 Kg-cm (5 lb-in).

33. Adjust the N_2O flow to 0 mL/min (float rests on bottom and does not spin).

34. If necessary, adjust the O_2 needle valve stem for minimum flow (200 ± 25 mL/min).

35. Remove the stop screw from the collar on the O_2 flow control. Remove all traces of Loctite. Then, apply Loctite 242 (or the approved equivalent) to the stop screw and install it.

36. Loosen the collar on the O_2 knob. Place the knob on the shaft. Push in the O_2 knob and turn it clockwise until the stop screw contacts the body stop.

37. Turn the collar clockwise until the collar stop screw rests against the kick-in tab.

    Note: You may have to adjust the height of the collar stop screw (step 45) at this point.

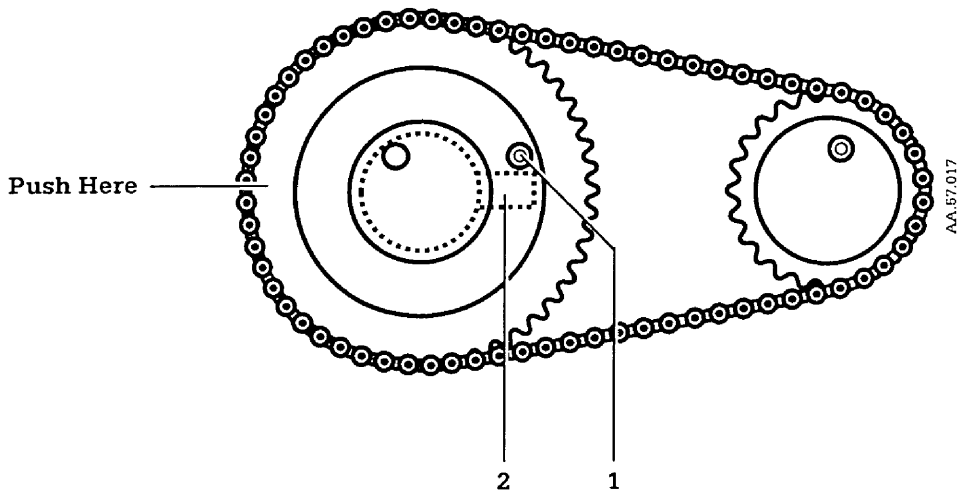

1. Collar Stop Screw
2. Kick In Tab

Figure 4-12 Setting the kick-in point

⚠ **CAUTION: Do not move the O_2 valve stem. If the minimum O_2 flow goes out of tolerance (200±25 mL/min), you must repeat this procedure from the beginning.**

38. Hold the O_2 knob at the minimum stop and increase the N_2O flow to approximately 500 mL/min (kick-in point). Verify that the collar and knob shoulder are flush. To maintain their relative position, tighten one of the three collar set screws. Remove the knob and collar as an assembly.

    Note: 500 mL/min is a good starting point for this adjustment. If later steps indicate tracking is off, repeat this step using a different kick-in point. If you cannot find a kick-in point between 700 and 300 mL/min (French units may have a slightly lower range) that gives good tracking at low flows, the needle valves are mismatched. Replace either the N_2O or the O_2 needle valve and repeat this procedure (Section 4.4.B) from step 1.

⚠ **WARNING: Failure to properly torque flow control components may result in incorrect proportioning and hypoxic mixtures.**

39. Torque the three collar set screws to 2.3 Kg-cm (5 lb-in).

40. Slide the O_2 flow control knob back onto the shaft with the collar stop screw against the kick-in tab (Figure 4-12) and the knob stop screw against the body stop.

⚠ **WARNING: Failure to properly torque flow control components may result in incorrect proportioning and hypoxic mixtures.**

41. Torque the three O_2 flow control knob set screws to 2.3 Kg-cm (5 lb-in).

⚠ **CAUTION: It is absolutely essential that there is paper thin clearance between the top of the needle valve body stop and the stop screw on the first counter-clockwise turn. Otherwise, the stop screw has insufficient contact with the body stop when the knob is set to minimum flow.**

42. Turn the O_2 flow control one turn counter-clockwise and check that the stop screw rubs against or contacts the body stop. If necessary, turn in the stop screw slightly. Then, turn the knob clockwise one turn and repeat this step.

43. Back off the stop screw until the rubbing just stops. Then, turn the O_2 flow control completely clockwise and check that the stop screw still hits the stop.

44. Rotate the O_2 flow control one and a half turns counter-clockwise to check that the stop screw clears the body stop.

⚠ **WARNING: If the collar stop screw does not clear the back side of the tab, increasing the O_2 flow will also increase the N_2O flow.**

45. Adjust the height of the collar stop screw:

    a. Start with the N_2O and O_2 flow controls at the minimum setting.

    b. Turn the N_2O flow control counter-clockwise until the O_2 knob turns with the N_2O flow control (kick-in tab engages).

    c. Continue to turn the N_2O flow control counter-clockwise until the kick-in tab is aligned between the N_2O and the O_2 flow controls (Figure 4-12).

    d. Turn the O_2 knob one turn counter-clockwise, until the collar stop screw is directly above the kick-in tab.

    e. Remove any play from loose thread engagement on the sprocket. Push on the sprocket opposite the kick in tab (Figure 4-12) and adjust the height of the collar stop screw so that it just touches the kick-in tab as the O_2 knob turns forth and back over the tab.

    f. Turn the collar stop screw counter-clockwise, very slightly (10 to 15 degrees).

g. Turn the O_2 knob one turn clockwise and verify that the stop screw still hits the kick-in tab.

h. Rotate the O_2 flow control one and a half turns counter-clockwise to verify that the collar stop screw clears the kick-in tab.

46. Test link system tracking. Observe the following precautions:

- Adjust only the N_2O flow control.
- Start with the N_2O and O_2 flow controls at the minimum setting.
- Increase the N_2O flow as specified in the table and make sure that the O_2 flow is in the allowed range.
- If you overshoot a setting, turn the O_2 flow control clockwise until the N_2O flow decreases to the previous level and continue with this step.

Table Step 46 - Link proportioning system set to 25%

Set the N_2O flow to:	The O_2 flow must read:
0.9 L/min	0.24 to 0.36 L/min
1.5 L/min	0.40 to 0.61 L/min
3.0 L/min	0.79 to 1.22 L/min

Note: If all of the previous three O_2 flows were either too high or too low, adjust the kick-in point. Locate the kick-in point on your system. Then, loosen the collar on the O_2 flow control and start the adjustment procedure at step 37. Use the current kick-in point as a guide to set the new kick-in point.

Set the N_2O flow to:	The O_2 flow must read:
6.0 L/min	1.58 to 2.44 L/min
9.0 L/min	2.37 to 3.66 L/min

Note: If O_2 flows are too high or too low, adjust the O_2 secondary regulator (step 4). Then, recheck the maximum flow.

Table Step 46 - Link proportioning system set to 30% (France)

Set the N_2O flow to:	The O_2 flow must read:
0.9 L/min	0.31 to 0.55 L/min
1.5 L/min	0.50 to 0.76 L/min
3.0 L/min	1.04 to 1.55 L/min

Note: If all of the previous three O_2 flows were either too high or too low, adjust the kick-in point. Locate the kick-in point on your system. Then, loosen the collar on the O_2 flow control and start the

adjustment procedure at step 37. Use the current kick-in point as a guide to set the new kick-in point.

Set the N_2O flow to:	The O_2 flow must read:
6.0 L/min	2.07 to 3.13 L/min
9.0 L/min	3.09 to 4.71 L/min

Note: If O_2 flows are too high or too low, adjust the O_2 secondary regulator (step 4). Then, check the maximum flow again.

47. Test link system tracking. Observe the following precautions:

- Adjust only the O_2 flow control. Leave the N_2O flow control set to 9.0 L/min.
- Start with an initial O_2 flow between 2.40 and 3.66 L/min and go from higher to lower flow rates.
- If you overshoot a setting, turn the N_2O flow control counter-clockwise until the O_2 flow rises to the previous level and continue with this step.

Table Step 47 - Link proportioning system set to 25%

Set the O_2 flow to:	The N_2O flow must read:
3 L/min	7.36 to 11.41 L/min

Note: If N_2O flows are too low or too high, adjust the O_2 secondary regulator output (step 4). Then, recheck the maximum O_2 flow.

Set the O_2 flow to:	N_2O flow must read
1.0 L/min	2.46 to 3.80 L/min
0.5 L/min	1.23 to 1.90 L/min
0.3 L/min	0.74 to 1.14 L/min

Note: If any of the previous three N_2O flows were either too high or too low, adjust the kick-in point. Locate the kick-in point on your system. Then, loosen the collar on the O_2 flow control and start the adjustment procedure at step 37. Use the current kick-in point as a guide to set the new kick-in point.

Note: If after repeated adjustments, N_2O flows are out of range in different directions for high and low flow rates, too high at low flows and too low at high flows (or vice versa) the N_2O and O_2 needle valves may be mismatched. Replace one of the needle valves and repeat this procedure.

Table Step 47- Link proportioning system set to 30% (France)

Set the O_2 flow to:	The N_2O flow must read:
3.0 L/min	6.14 to 7.87 L/min

Note: If N_2O flows are too low or too high, adjust the O_2 secondary regulator output (step 4). Then, check the maximum O_2 flow again.

Set the O_2 flow to:	The N_2O flow must read:
1.0 L/min	2.05 to 2.63 L/min
0.5 L/min	1.02 to 1.32 L/min
0.3 L/min	0.61 to 0.79 L/min

Note: If any of the previous three N_2O flows were either too high or too low, adjust the kick-in point. Locate the kick-in point on your system. Then, loosen the collar on the O_2 flow control and start the adjustment procedure at step 37. Use the current kick-in point as a guide to set the new kick-in point.

Note: If after repeated adjustments, N_2O flows are out of range in different directions for high and low flow rates, too high at low flows and too low at high flows (or vice versa) the N_2O and O_2 needle valves may be mismatched. Replace one of the needle valves and repeat this procedure.

⚠ **WARNING: Failure to properly torque flow control components may result in incorrect proportioning and hypoxic mixtures.**

48. Verify that all flow control knob set screws are torqued to 2.3 Kg-cm (5 lb-in).

49. Install the flowmeter shield, unless the additional gas flow also requires adjustment. If the additional gas flow also requires adjustment, continue with Section 4.5, Adjusting the Additional gas Flow.

50. Reapply the flow control labels.

51. Complete Sections:

    3.1, Excel Tests
    3.2, System Check-Out

4.5 Adjusting Additional Gas Flow

Important: Each time you do this procedure you must replace the:

- Stop screw inside additional gas knobs (minimum flow)
- Set screws used to attach flow control knob

Make sure that you have new set and stop screws before starting this procedure. You may also have to replace the flow control label if it is damaged in the process. Refer to Section 6, Illustrated Parts, for label and set screw kit stock numbers.

Continue with the adjustment procedure if you have serviced the:

- Additional gas needle valve

A. Check Calibration

Skip this section and continue with the actual adjustment (Section 4.5.B) if the check-out procedure or similar test results indicate a problem or if you are replacing an additional gas needle valve.

Note: Always check the maximum flowrate of the additional gas with a full cylinder. Variations in supply pressure will affect flow.

1. Connect O_2 and additional gas supplies and set the system master switch to "ON."

   Note: The Air/N_2O selector switch must be set to air if present.

2. Turn the additional gas flow control completely clockwise. If the float spins or does not come to rest on the bottom of the flowtube, continue with the adjustment procedure (Section 4.5.B).

3. Adjust the additional gas flow to maximum:

   Air: 15 L/min ± up to one additional turn counter-clockwise.
   CO_2: 2 L/min or 500 ± 50 mL/min depending on the model

4. If the maximum flow is out of range, continue with the adjustment procedure (Section 4.5.B).

5. If adjustment is not required, complete Sections:

   3.1, Excel Tests
   3.2, System Check-Out

B. Adjustment Procedure

1. Set the system master switch to "OFF."

   Note: The Air/N_2O selector switch must be set to air if present.

2. Remove the flowmeter shield.

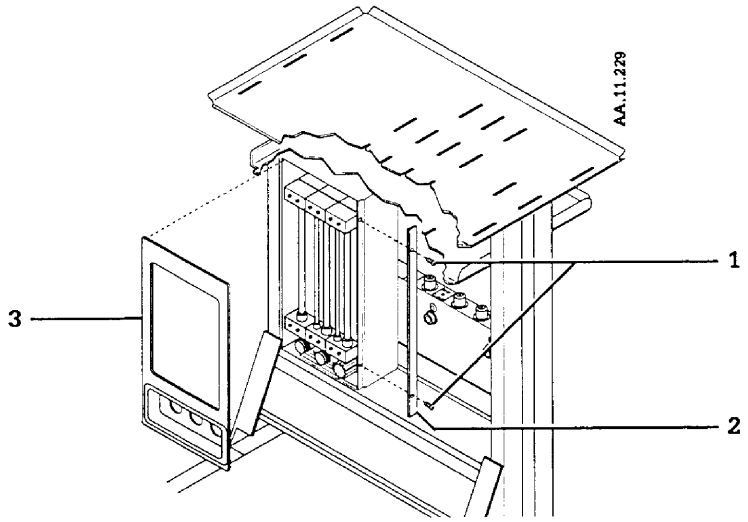

1. Screws
2. Retainer
3. Flowmeter Shield

Figure 4-13 Removing flowmeter shield

3. Remove and discard the three set screws that attach the additional gas knob. Remove the knob.

4. Carefully remove the label from the knob.

5. Remove the stop screw from inside the O_2 flow control knob. Remove all traces of Loctite. Then, apply Loctite 242 (or the approved equivalent) to the stop screw and install it.

6. Loosen the set screws that attach the stop collar to the knob.

7. Set the system master switch to "ON" and supply O_2 and the additional gas to the Excel.

⚠ **CAUTION: Always start the third gas zero adjustment with a small flow through the third gas needle valve. This helps avoid adjusting the needle valve clockwise below zero flow, which will permanently damage the valve.**

8. Starting with a nominal flow, turn the additional gas needle valve clockwise until the float rests on the bottom of the flowtube and does not spin. Note the position of the stop on the needle valve body.

9. Remove the additional gas flowtube assembly, apply a leak detection solution to the manifold hole and check that no bubbles appear. If necessary, slowly turn the flow control knob clockwise until flow stops.

10. Locate the stop screw inside the knob. Test fit the knob to check that the stop screw will catch the needle valve body stop:

    a. Check that you have removed the set screws normally used to attach the knob to the shaft.

    b. Position the knob so that the stop screw turns clockwise into the stop.

    c. Slide the knob all the way onto the shaft.

    d. Turn the knob clockwise and check that the stop screw catches on the body stop.

    e. Turn in the stop screw if it does not catch, and repeat this step.

    f. Remove the knob.

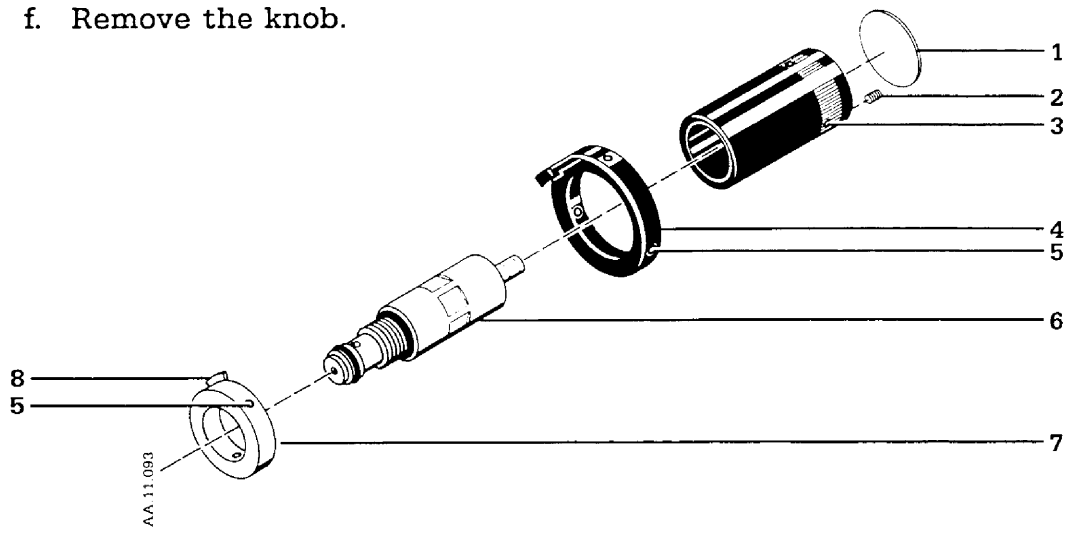

1. Label
2. Stop Screw
3. Set Screws (Single Use)
4. Stop Collar
5. Set Screws (Reusable)
6. Valve
7. Stop Ring
8. Tab

Figure 4-14 Additional gas needle valve

11. Loosely thread the new set screws into the knob. Make sure that the set screws will not engage the shaft.

12. Slide the knob onto the shaft. Rotate the knob clockwise until the stop screw engages the body stop.

13. Evenly tighten the set screws that attach the knob enough to turn the needle valve shaft.

⚠ **CAUTION: It is absolutely essential that there is paper thin clearance between the top of the needle valve body stop and the stop screw on the first counter-clockwise turn. Otherwise, the stop screw has insufficient contact with the body stop when the knob is set to minimum flow.**

14. Adjust the height of the minimum stop screw (inside the knob).

    a. Turn the knob one turn counter-clockwise and check that the stop screw rubs against or contacts the body stop. If there is no rubbing, turn in the stop screw slightly. Then, turn the knob clockwise one turn and repeat this step.

    b. Back off the stop screw until the rubbing just stops. Then, turn the knob completely clockwise and check that the stop screw still hits the body stop.

    c. Rotate the knob one and a half turns counter-clockwise to check that the stop screw clears the body stop.

⚠ **WARNING: Failure to properly torque flow control components may result in incorrect proportioning and hypoxic mixtures.**

15. Torque the knob set screws to 2.3 Kg-cm (5 lb-in).

16. Apply a light coat of Krytox (approved O_2 service lubricant) to all external o-rings on the flowtube assembly and install the assembly.

17. Turn the knob counter-clockwise until maximum flow is achieved:

    Air: 15 L/min
    CO_2: 2 L/min or 500 to 550 mL/min depending on the model

18. Rotate the maximum flow stop collar counter-clockwise until it contacts the tab on the stop ring. Slide the stop collar along the knob for maximum contact.

19. Evenly tighten the collar set screws just enough to hold the collar in place.

20. Turn the additional gas flow control clockwise one turn and check that the stop collar rubs against or contacts the back of the stop ring tab.

21. Loosen the set screws on the maximum flow stop collar and adjust the collar position to just eliminate the rubbing.

⚠ **WARNING: Failure to properly torque flow control components may result in incorrect proportioning and hypoxic mixtures.**

22. Torque the stop collar set screws to 2.3 Kg-cm (5 lb-in).

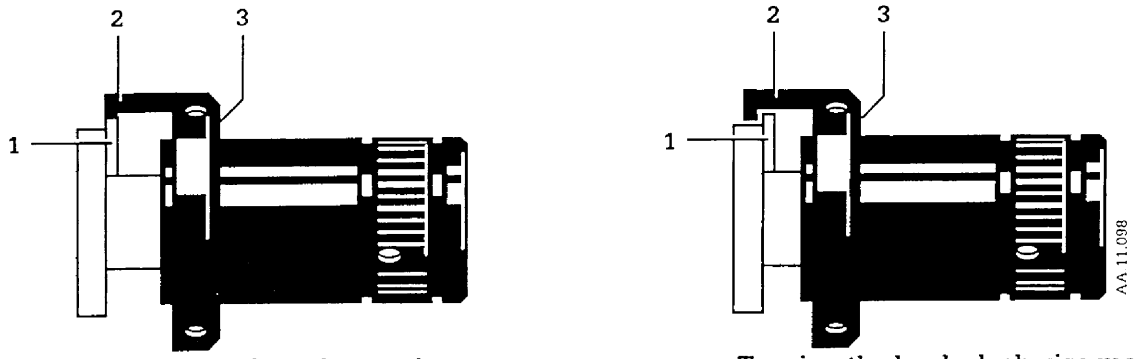

At maximum flow the maximum stop hits the tab and prevents you from turning the knob counter clockwise.

Turning the knob clockwise moves the valve stem in so that the maximum stop just barely clears the tab.

1. Tab
2. Maximum Stop
3. Stop Collar

Figure 4-15 Additional gas needle valve

23. Check that turning the knob completely clockwise yields a minimum flow of 0 L/min (the float rests on the bottom and does not spin).

    Note: If the stop collar catches when you decrease the flow, adjust the stop collar height.

24. Check that the maximum flow is acceptable:

    Air: 15 L/min ± up to one additional turn counter-clockwise.
    CO_2: 2 L/min or 500 to 550 mL/min depending on the model

⚠ **WARNING: Failure to properly torque flow control components may result in incorrect proportioning and hypoxic mixtures.**

25. Torque all knob set screws to 2.3 Kg-cm (5 lb-in).

26. Install the flowmeter shield.

27. Reapply the flow control label.

28. Complete Sections:

    3.1, Excel Tests
    3.2, System Check-Out

5/Repair Procedures

⚠WARNING: This manual specifies Krytox as an oxygen service lubricant. Do not use any lubricant on the Excel that is not specifically approved for use on anesthesia or oxygen equipment. Oil and grease based lubricants burn violently when exposed to oxygen.

⚠CAUTION: Apply Teflon® tape as follows: wrap it clockwise (looking at the thread end); hold enough tension on the tape so that it lays into the threads; do not use too much tape (1-1/3 layer is adequate); do not wrap the first thread.

⚠CAUTION: The disconnect collars on the fittings must be used correctly to avoid leaks. Remove the tubing by pushing in the collar and pulling. Prying out the tubing or pulling on the collar can damage the fitting.

⚠CAUTION: Damaged, deformed, or partially seated tubing can cause leaks. Before you connect a tube, make sure that the outside of the tube is not scratched or damaged, the end is cut straight, and the tube is not pinched or deformed. Push the tube completely into the connector. Then, pull gently on the tube to make sure it stays seated.

5.1 Replacing an Air or O_2 Power Outlet

The power outlets have no serviceable parts. Fittings and outlets can be replaced separately. All Excels except Scandinavian use the Mini-Schrader outlets. Refer to Section 6, Illustrated Parts, for the Stock Numbers.

1. Disconnect all pipeline hoses from the wall and the Excel, close all gas cylinders, unplug the power cord and set the system master switch to "OFF."

2. Unscrew the outlet and remove the seal.

   ⚠ **CAUTION: Apply Teflon tape as follows: wrap it clockwise (looking at the thread end); hold enough tension on the tape so that it lays into the threads; do not use too much tape (1-1/3 layer is adequate); do not wrap the first thread.**

3. Wrap the threads on the new outlet with Teflon tape.

4. Install a new seal, screw in and tighten the power outlet, and complete Sections:

   3.1, Excel Tests
   3.2, System Check-Out

® Teflon is a registered trademark of Dupont de Nemours E.I. & Company Inc.

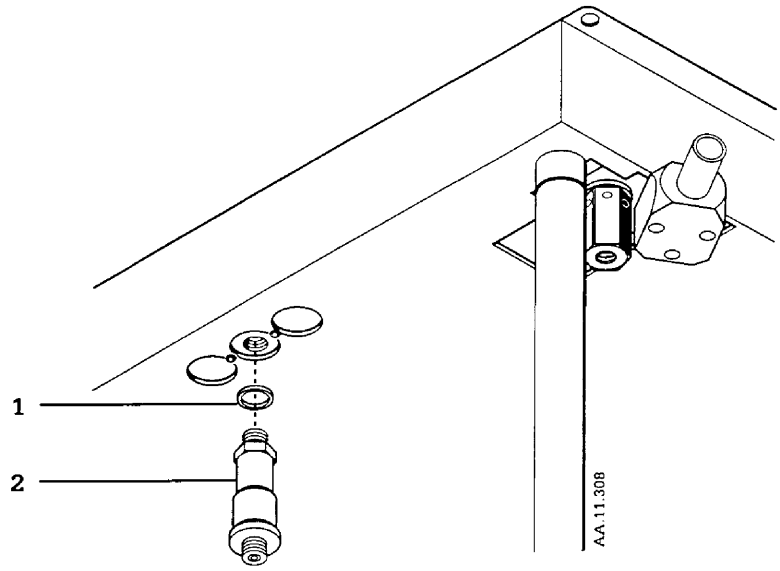

1. Seal
2. Outlet Fitting

Figure 5-1 Replacing the check valve on the O_2 power outlet

5.2 Replacing the Common Gas Outlet Pressure Relief Valve

The pressure relief valve on the common gas outlet has no serviceable parts. Refer to Section 6, Illustrated Parts, for the Stock Number.

1. Disconnect all pipeline hoses from the wall and the Excel, close all gas cylinders, unplug the power cord and set the system master switch to "OFF."

2. Unscrew the pressure relief valve from the common gas outlet.

3. Remove the screen filter and clean off any debris.

   Note: The screen helps prevent fouling of the relief valve. It is not present on older Excels but can be installed if necessary. Refer to Section 6, Illustrated Parts, for the Stock Number.

4. Install the screen (if present).

5. Center the seal on the new pressure relief valve.

   Note: If the seal is not centered, it will leak.

6. Screw in and tighten the new pressure relief valve, and complete Sections:

   3.1, Excel Tests
   3.2, System Check-Out

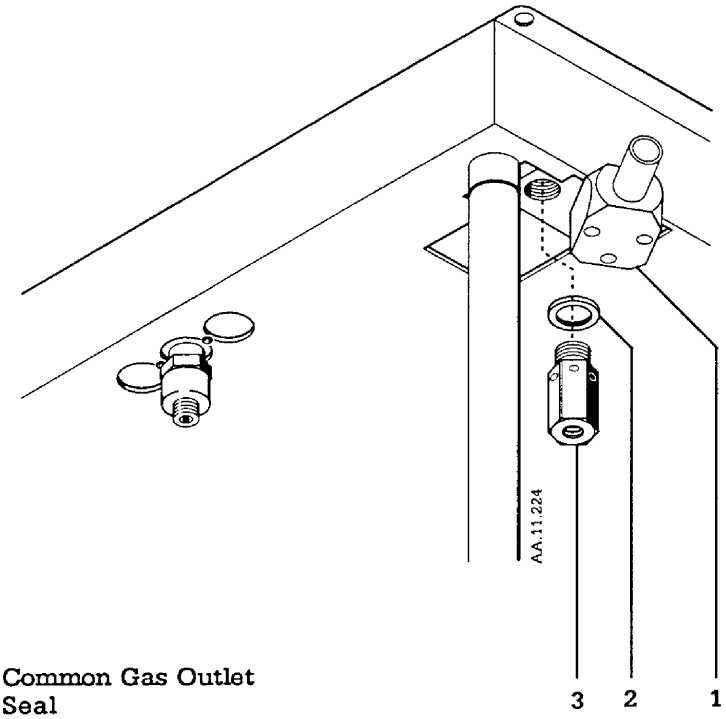

1. Common Gas Outlet
2. Seal
3. Pressure Relief Valve

Figure 5-2 Replacing the pressure relief valve on the common gas outlet

5.3 Tray Top Removal

Procedures 5.4 through 5.8 require tray top removal.

1. Disconnect all pipeline hoses from the wall and the Excel, close all gas cylinders, unplug the power cord and set the system master switch to "OFF."

2. Remove the screws that attach the tray top retainers. Lift off the retainers and the tray.

   Note: Current production Excels use two screws and spacers to attach the retainers. Earlier Excels used two bolts. Figure 5-3 shows both versions.

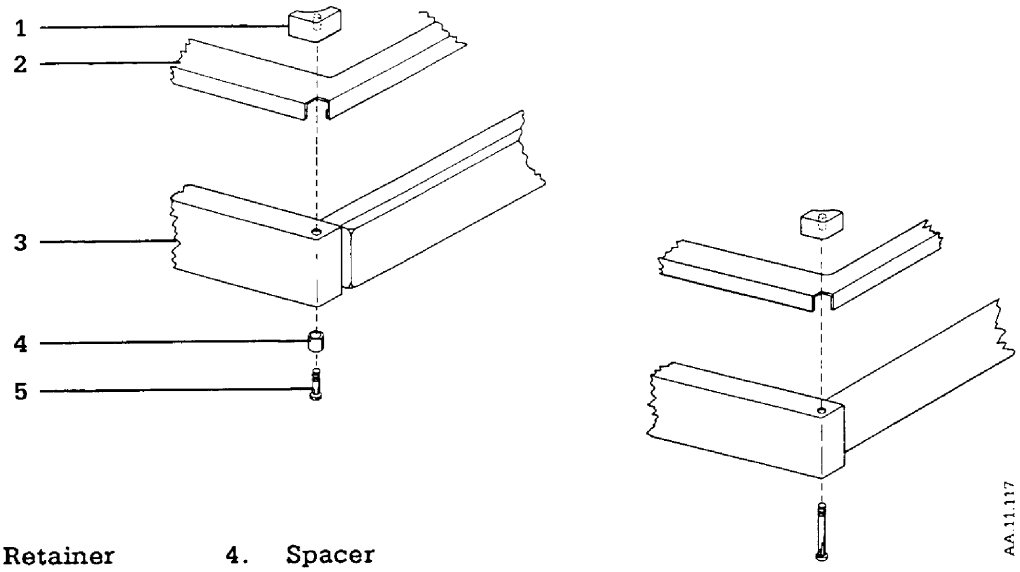

1. Retainer
2. Tray Top
3. Excel Frame
4. Spacer
5. Bolt

Figure 5-3 Removing the tray top

5.4 Replacing Shutoff Valves

The shutoff valves are gas specific and have no serviceable parts. Refer to Section 6, Illustrated Parts, for the Stock Numbers.

1. Disconnect all pipeline hoses from the wall and the Excel, close all gas cylinders, unplug the power cord and set the system master switch to "OFF."

2. Remove the screws securing the tray top retainers. Lift off the retainers and the tray.

   Note: Current production Excels use two screws and spacers to attach the retainers. Earlier Excels used two bolts. Figure 5-3 shows both versions.

3. To replace a shutoff valve:

   a. Disconnect all tubing from the valve.

   b. Loosen the hex nut (adjustable wrench) and slide the shutoff valve out of the bracket.

⚠ **WARNING: Shutoff valves are polarized. The port labeled "OUT" connects to the input of the flowmeter module. The port labeled "IN" connects to the gas supply module.**

c. Orient the shutoff valve (Figure 5-4). The port labels ("OUT" and "IN") face down with the "OUT" port closest to the flowmeter module.

d. Slide the new shutoff valve into the bracket, tighten the hex nut, and connect the tubes (Figure 5-4):

Port	Fitting Type	Connects to
IN	Gas Specific	Gas Supply Module
OUT	Gas Specific	Input of Flowmeter Module
Control	O_2 (6 mm)	Tee Piece from switch

e. Install the tray top, and complete Sections:

3.1, Excel Tests
3.2, System Check-Out

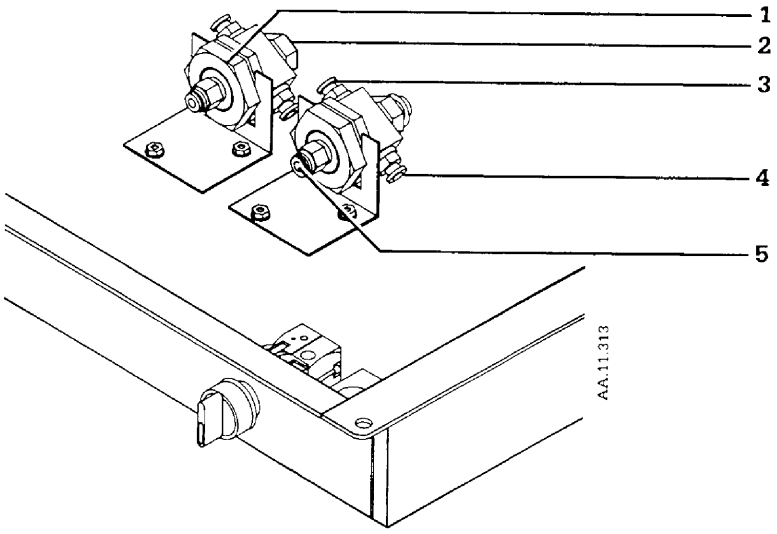

1. Hex Nut
2. Shutoff Valve (Gas Specific)
3. Out
4. In
5. Control Port

Figure 5-4 Replacing the shutoff valve

5.5 Replacing the System Master Switch

The system master switch has no serviceable parts. Refer to Section 6, Illustrated Parts, for the Stock Numbers.

Note: The German Excel uses a different system master switch than other Excels.

A. German Excels

1. Disconnect all pipeline hoses from the wall and the Excel, close all gas cylinders, unplug the power cord and set the system master switch to "OFF."

2. Remove the screws securing the tray top retainers. Lift off the retainers and the tray.

3. Remove the switch:

   - Disconnect the 6 mm tubing from the switch. Press in on the collar and pull the tubing out of the fitting.
   - Disconnect the 8 mm elbows from the switch. Press in on the collar and pull the elbows off the switch fitting.
   - Disconnect the wiring harness from the switch.
   - Set the switch to "OFF."
   - Remove the mounting screws.
   - Release the knob. Support the switch, push the knob in and turn it counter-clockwise.
   - Pull the knob out from the front of the Excel and remove the switch.

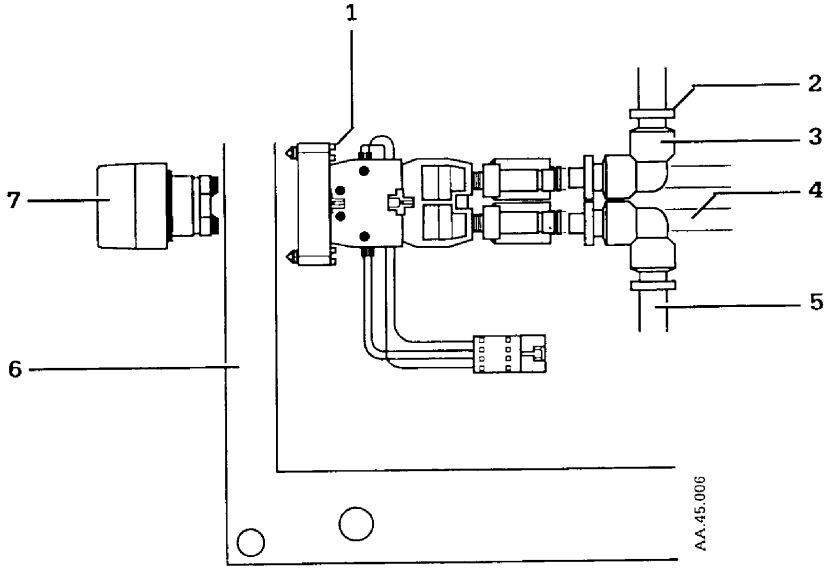

1. Mounting Screw
2. Collar
3. Elbow
4. O_2 (6 mm Tubing)
5. Air (8 mm Tubing)
6. Panel
7. Knob

Figure 5-5 Replacing a German system master switch

4. Install the new switch:

   - Reconnect the elbow fittings, the tubing and the wire harness. Switch fittings are gas specific.

Wire Harness	Switch Connection
Pin 1	Pin 1 (ANC)
Pin 2	Pin 2 (ACOM)
Pin 3	Pin 3 (BNO)
Pin 4	Pin 4 (BCOM)

Port	Tube	Elbow	Connection
Port 1 Air	8 mm	Yes	Air supply module with tee fitting
Port 2 Air	8 mm	Yes	Air/N_2O selector switch
Port 1 O_2	6 mm	No	O_2 supply module with tee fitting
Port 2 O_2	6 mm	No	Excel pneumatics with tee fitting

   - Start the mounting screws.
   - Push the knob in and turn it clockwise until it locks.
   - Tighten the mounting screws.

5. Test the switch:

   - Connect O_2 and air supplies and plug the Excel into an electrical outlet.
   - Set the Air/N_2O selector switch to "Air."
   - Set the system master switch to "ON."
   - If a 7800 Ventilator is connected to the Excel, make sure that the ventilator is also "ON." Otherwise, make sure that there is continuity between 20 and 22 and no continuity between pins 6 and 21 on the Excel, 25 pin connector.
   - Make sure that you do not hear or feel any leaks.
   - Make sure that with the O_2 flow control fully clockwise, the O_2 flowtube shows minimum flow (200 ± 25 mL/min).
   - Open the air flow control and check air flow through the flowtube.
   - Set the system master switch to "OFF."
   - If a 7800 Ventilator is connected to the Excel, make sure that the ventilator is also "OFF." Otherwise, make sure that there is continuity between 6 and 21 and no continuity between pins 20 and 22 on the Excel, 25 pin connector.

- Make sure that the O_2 and the air flows stop.

6. Install the tray top, and complete Sections:

   3.1, Excel Tests
   3.2, System Check-Out

B. All Other Excels

1. Disconnect all pipeline hoses from the wall and the Excel, close all gas cylinders, unplug the power cord and set the system master switch to "OFF."

2. Remove the screws securing the tray top retainers. Lift off the retainers and the tray.

   Note: Current production Excels use two screws and spacers to attach the retainers. Earlier Excels used two bolts. Figure 5-3 shows both versions.

3. Identify the type of switch installed. Stock Numbers for all three types appear in Section 6, Illustrated Parts:

   a. Kay Pneumatics switches (Figure 5-6) have three tubes going into them.

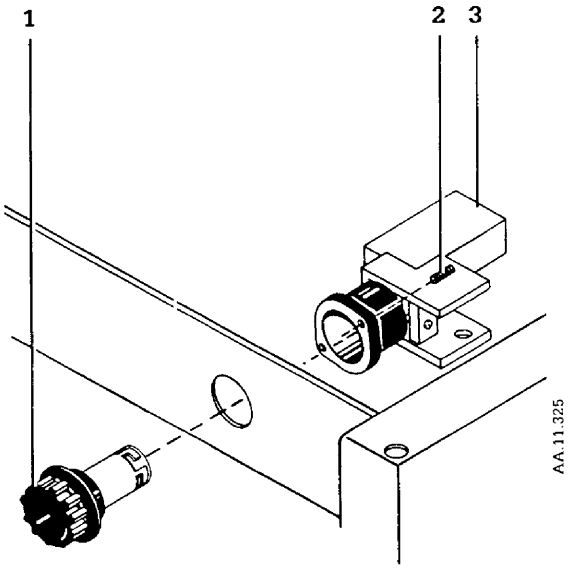

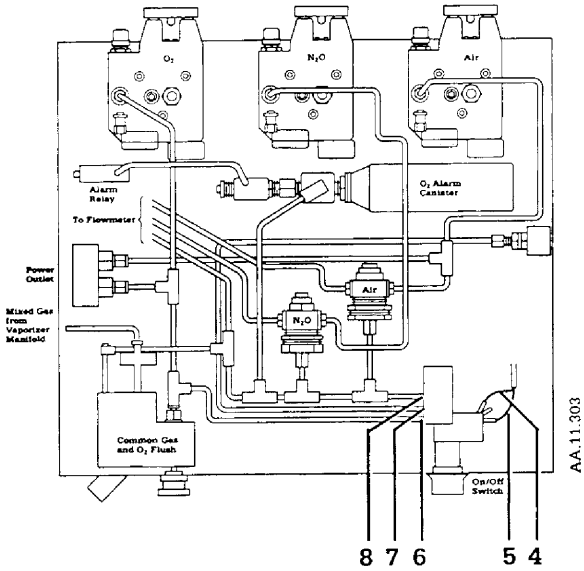

1.	Knob	5.	Black Wire
2.	Mounting Screws	6.	Port 3
3.	System Master Switch	7.	Port 2
4.	White Wire	8.	Port 1

Figure 5-6 Kay Pneumatics switch - typical pneumatic configuration

b. Telemecanique switches have four tubes. One version (Figure 5-7) has vertical mounting screws. The other (Figure 5-8) has horizontal mounting screws. Both versions require different tubing lengths and the knobs are not interchangeable.

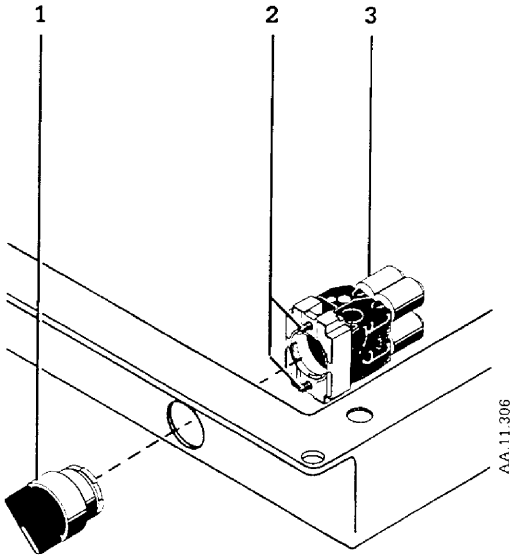

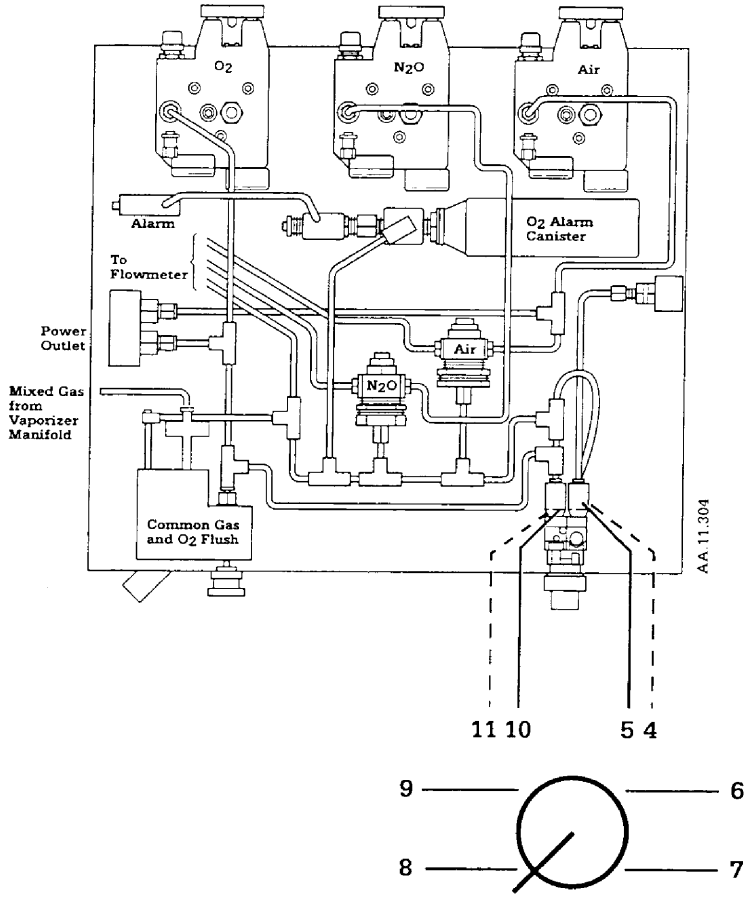

1. Knob
2. Mounting Screws
3. System Master Switch
4. Port 3
5. Port 4
6. Pin 4
7. Pin 3
8. Pin 2
9. Pin 1
10. Port 1
11. Port 2

Note: Dashed lines mean that the port is on the bottom.

Figure 5-7 Telemecanique switch with vertical mounting screws - typical pneumatic configuration

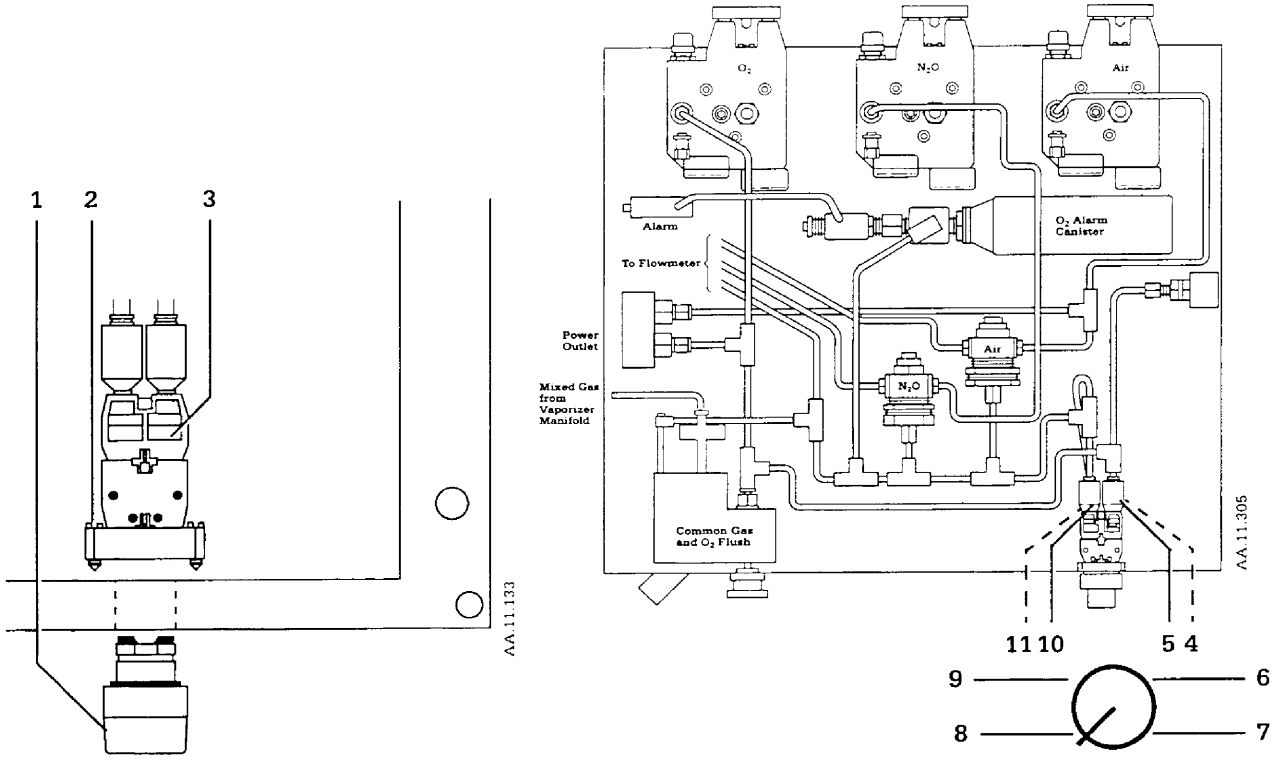

1. Knob
2. Mounting Screws
3. System Master Switch
4. Port 4
5. Port 1
6. Pin 1
7. Pin 4
8. Pin 3
9. Pin 2
10. Port 2
11. Port 3

Note: Dashed lines mean that the port is on the bottom.

Figure 5-8 Telemecanique switch with horizontal mounting screws - typical pneumatic configuration

Note: To replace a Kay Pneumatics switch (three tube connections) with a Telemecanique switch (four tube connections), order: the Telemecanique switch with horizontal mounting holes (Figure 5-8); enough 6 mm tubing to replace all tubes connected to the switch plus an extra foot (tubing lengths are different); and a 6 mm Tee fitting. Connect the black wire to pin 1 (ANC) and the white wire to pin 2 (ACOM) on the Telemecanique switch. Refer to Section 6, Illustrated Parts, for Stock Numbers.

4. To replace the system master switch:

   a. Remove the switch:

   - On the Telemecanique switch, press in on the collar and pull the tubing out of the fitting.

⚠ **CAUTION: If you cut the tubing to remove a Kay Pneumatics switch: use a knife; cut a straight edge perpendicular to the tube axis; and do not pinch or deform the tube. A ragged edge, a slightly misshapen**

tube, or a tube that is scratched or gauged on the outside surface will leak.

- On the Kay Pneumatics switch, firmly pull, or cut the tubing to remove.

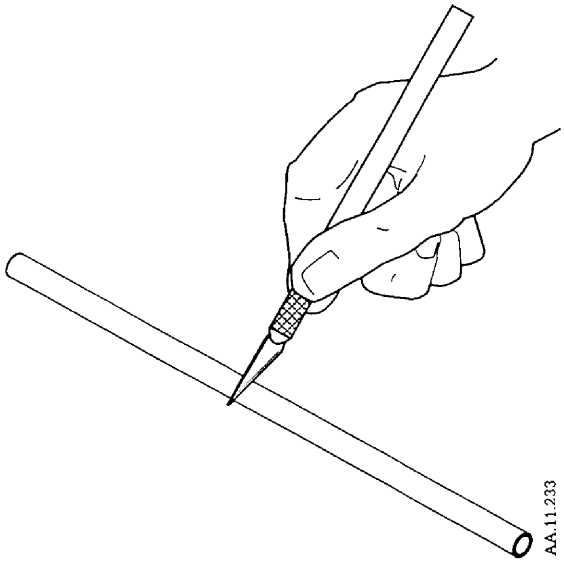

Figure 5-9 Cutting pneumatic tubing (Kay Pneumatics switches only)

- Disconnect the wiring harness from the switch.
- Set the switch to "OFF."
- Remove the mounting screws.
- Release the knob. Support the switch, push the knob in and turn it counter-clockwise.
- Pull the knob out from the front of the Excel.

b. Install the switch:

- Reconnect the tubing and the wire harness:

Kay Pneumatics switch (Figure 5-6):

Wire	Switch Connection
Black	NC
White	Common

Port	Connection
Port 1	Exhaust Block
Port 2	Shutoff valves
Port 3	Tee from Gas Supply Module

Telemecanique switch - (Figure 5-7, 5-8):

Wire Harness	Switch Connection
Pin 1	Pin 1 (ANC)
Pin 2	Pin 2 (ACOM)
Pin 3	Pin 3 (BNO)
Pin 4	Pin 4 (BCOM)

Port	Connection
Port 1	Tee from Gas Supply Module
Port 2	Shutoff valves and Port 3 w/ Tee
Port 3	Shutoff valves and Port 2 w/ Tee
Port 4	Exhaust Block

- Start the mounting screws.
- Push the knob in and turn it clockwise until it locks.
- Tighten the mounting screws.

c. Test the switch:

- Connect an O_2 supply and plug the Excel into an electrical outlet.
- Set the system master switch to "ON."
- If a 7800 Ventilator is connected to the Excel, make sure that the ventilator is also "ON."
- If a 7750 Ventilator is connected, switch "OFF" the ventilator and make sure that a power failure alarm triggers.
- If a 7800 or 7750 Ventilator is not connected, make sure that there is continuity between 20 and 22 and no continuity between pins 6 and 21 on the Excel, 25 pin connector.
- Make sure that you do not hear or feel any large leaks.

- Make sure that with the O_2 flow control fully clockwise, the O_2 flowtube shows minimum flow (200 ± 25 mL/min).
- Set the switch to "OFF."
- If a 7800 Ventilator is connected to the Excel, make sure that the ventilator is also "OFF." Otherwise, make sure that there is continuity between 6 and 21 and no continuity between pins 20 and 22 on the Excel, 25 pin connector.
- Make sure that the O_2 flow stops.

d. Install the tray top, and complete Sections:

3.1, Excel Tests
3.2, System Check-Out

5.6 Replacing the Exhaust Block

There are two styles of exhaust block. One has an internal check valve, the other does not.

Note: The German Excel does not have an exhaust block.

Country	Exhaust Block Style	Type of Leak Testing
Australia-210 France-210 ISO-110 Italy 110/210 Scandinavia 210	Check Valve	Positive or negative pressure at common gas outlet
Austria-210 ISO-410 & 210 Spain-110/210 Switzerland - 210	No Check Valve	Positive pressure at common gas outlet Negative pressure at exhaust block

The exhaust block has no serviceable parts. Refer to Section 6, Illustrated Parts, for Stock Numbers.

1. Disconnect all pipeline hoses from the wall and the Excel, close all gas cylinders, unplug the power cord and set the system master switch to "OFF."

2. Remove the screws securing the tray top retainers. Lift off the retainers and the tray.

   Note: Current production Excels use two screws and spacers to attach the retainers. Earlier Excels used two bolts. Figure 5-3 shows both versions.

3. To replace the exhaust block:

   a. Remove the top mounted cabinet (if present).

   b. Disconnect the tube.

   c. Remove the mounting screws and lift out the block.

   d. Install the new block, connect the tube, and tighten the mounting screws.

   e. Install the tray top, and complete Sections:

      3.1, Excel Tests
      3.2, System Check-Out

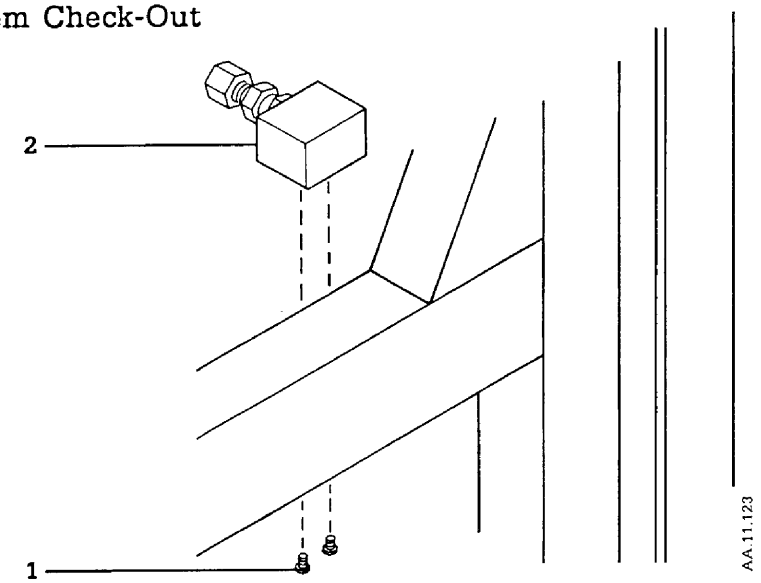

1. Screws
2. Exhaust Block

Figure 5-10 Replacing the exhaust block

5.7 Servicing or Replacing the Low O_2 Pressure Alarm

The following low O_2 pressure alarm components can be replaced separately. Refer to Section 6, Illustrated Parts, for the Stock Numbers

Canister
O-rings and fittings
Alarm regulator
Check valve
Flow regulator
Flow regulator lock nut
Reed alarm
Filters

1. Disconnect all pipeline hoses from the wall and the Excel, close all gas cylinders, unplug the power cord and set the system master switch to "OFF."

2. Remove the screws securing the tray top retainers. Lift off the retainers and the tray.

   Note: Current production Excels use two screws and spacers to attach the retainers. Earlier Excels used two bolts. Figure 5-3 shows both versions.

3. To replace the reed alarm:

   a. Remove any top mounted cabinets.

   b. Remove the screws.

   c. Disconnect the tubing from the reed alarm.

   d. Mount the new reed alarm and reconnect the tubing.

   e. Remount the top cabinet if necessary.

4. To replace or service the low O_2 pressure alarm:

   a. Remove any top mounted cabinets.

   b. Remove the KEP nuts.

   c. Disconnect the tubing.

   d. Undo the cable tie and remove the alarm assembly.

   e. To replace specific parts, disassemble the alarm (Figure 5-11). Individually replaceable items are identified in Figure 5-11.

      Note: Items marked new in Figure 5-11 will not work on the older style of alarm assembly. Instead of replacing the item on an old assembly, upgrade the assembly by replacing all items marked (new).

   f. Reassemble the alarm as required.

   g. Reconnect the tubing and mount the alarm.

5. Install the tray top, and complete Sections:

   4.4, Adjusting the Low O_2 Alarm
   3.1, Excel Tests
   3.2, System Check-Out

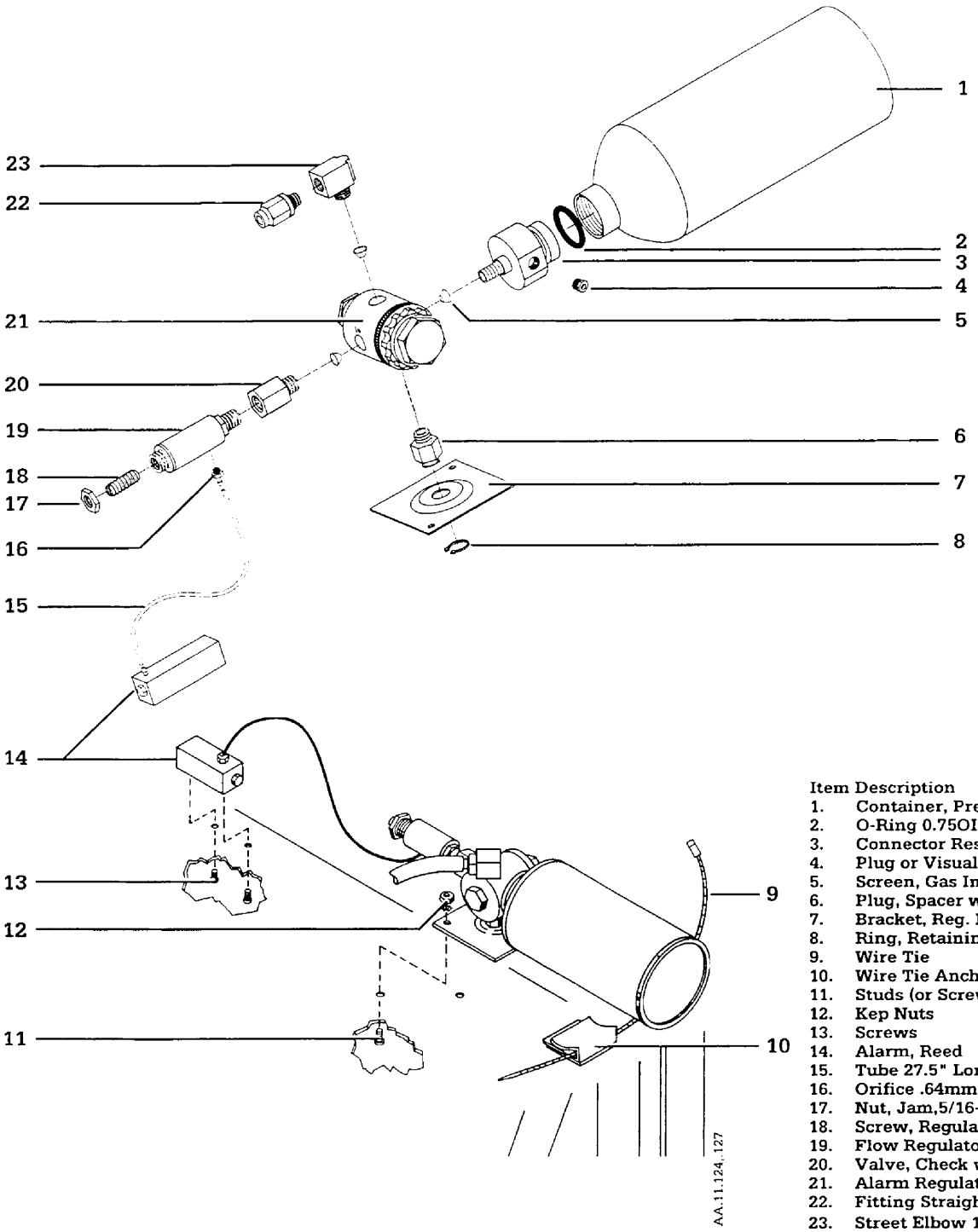

Item	Description
1.	Container, Pres, 16 oz. (new)
2.	O-Ring 0.75OID 1OD 0.124W (new)
3.	Connector Reservoir (new)
4.	Plug or Visual Alarm Connector (new)
5.	Screen, Gas Inlet 150 mesh (3)
6.	Plug, Spacer w/Groove
7.	Bracket, Reg. Mtg.
8.	Ring, Retaining Bowed
9.	Wire Tie
10.	Wire Tie Anchor
11.	Studs (or Screw on other units)
12.	Kep Nuts
13.	Screws
14.	Alarm, Reed
15.	Tube 27.5" Long
16.	Orifice .64mm Hose Barb
17.	Nut, Jam,5/16-40
18.	Screw, Regulator Adj. 5/16-40
19.	Flow Regulator
20.	Valve, Check w/Spring Orifice
21.	Alarm Regulator
22.	Fitting Straight Tubing 6mm
23.	Street Elbow 1/8NPT

Figure 5-11 Servicing the low O_2 pressure alarm

5.8 Servicing or Replacing the Common Gas Outlet

Refer to Section A if the outlet is fixed (does not swivel).

Refer to Section B if the outlet swivels.

Refer to Section C for dual common gas outlet (French).

A. Left Fixed (Australian; ISO 110; Italian) or Tapered ISO Outlets (German and Scandinavian)

The following parts can be replaced. Refer to Section 6, Illustrated Parts, for stock numbers.

Flush button: complete assembly or individual components
Flush valve: replacement only
Check valve (not used with German or Scandinavian Excels): flapper valve, o-ring, adapter

Note: On fixed, left hand outlets, the check valve housing is built into the outlet. Scandinavian and German Excels do not have a check valve.

1. Disconnect all pipeline hoses from the wall and the Excel, close all gas cylinders, unplug the power cord and set the system master switch to "OFF."

2. Remove the screws securing the tray top retainers. Lift off the retainers and the tray.

   Note: Current production Excels use two screws and spacers to attach the retainers. Earlier Excels used two bolts. Figure 5-3 shows both versions.

3. Remove the common gas outlet:

   a. Disconnect the tubing.

   b. Slide the common gas outlet back, until the flush button clears the front panel.

      Note: On older Excels, where the cut out is smaller, you must remove the outlet fitting from the common gas outlet before you can lift out the assembly.

   c. Remove the two mounting screws.

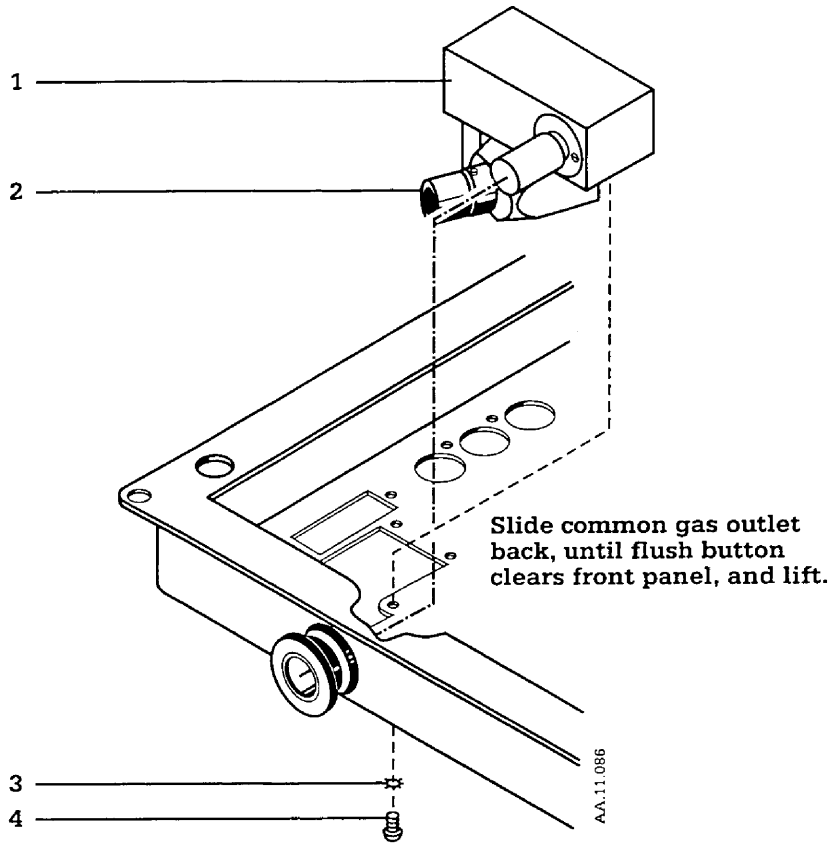

1. Common Gas Outlet
2. Outlet Fitting
3. Washer
4. Mounting Screw

Figure 5-12 Removing the common gas outlet.

4. Servicing the flush valve and button:

   a. Remove the two retaining screws and lift out the flush button assembly.

   b. To replace the valve:

      - Unscrew the Schrader valve. Use a Schrader valve stem extractor.
      - If the Schrader valve cannot be removed, remove the O_2 fitting and push the valve out from the opposite side.
      - Screw in a new Schrader valve and, if necessary, install the O_2 fitting.

c. To service the flush button:

- Remove the retaining ring and slide out the flush button.
- Lightly coat the replacement o-rings with Krytox (approved O_2 service lubricant). Then, replace the small o-ring on the button shaft and the large o-ring on the flush button adapter.
- Slide the flush button back into the fitting and replace the retaining ring.

d. Install the flush button assembly and tighten the screws.

5. To service the check valve:
   a. Unscrew the check valve housing.
   b. Remove the o-ring and the flapper valve.
   c. Lightly coat the replacement o-ring with Krytox (approved O_2 service lubricant).
   d. Make sure that the replacement flapper valve is clean and dry.
   e. Replace the o-ring and the flapper valve.
   f. Screw the check valve housing back into place.

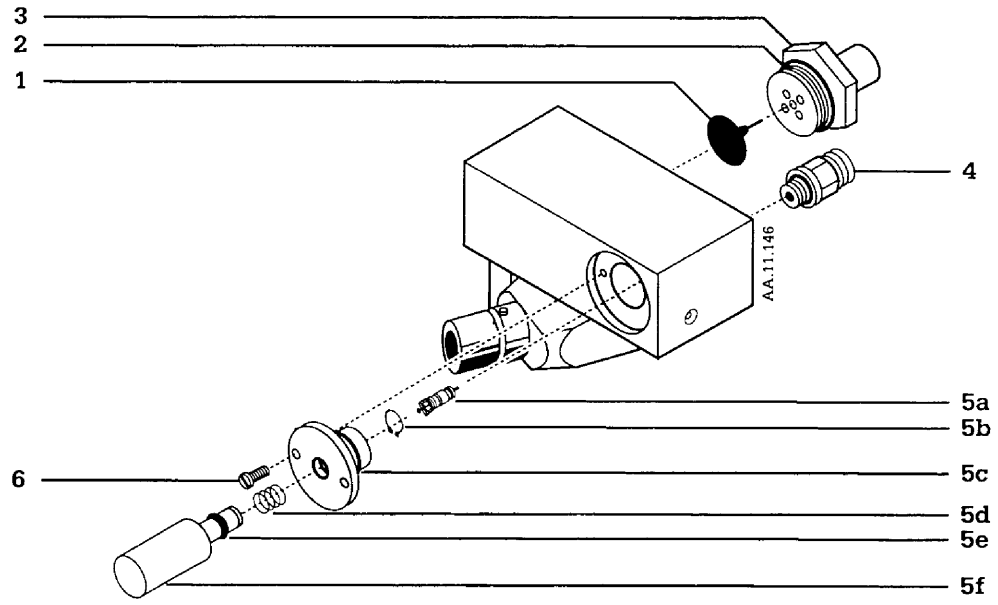

1. Flapper Valve
2. O-Ring
3. Check Valve Housing
4. Oxygen Fitting
5. Flush Valve Assembly
   a. Schrader Valve
   b. Retaining Ring
   c. O-Ring
   d. Spring
   e. O-Ring
   f. Flush Button
6. Retaining Screws

Figure 5-13 Servicing the common gas outlet (fixed left)

6. Line the flush button up with the hole in the front panel and slide the common gas outlet forward.

7. Install and tighten the mounting screws that attach the common gas outlet and reconnect the tubing.

   Note: Install the outlet fitting if necessary (older Excels only).

8. Complete Sections:

   3.1, Excel Tests
   3.2, System Check-Out

B. Left or Right Swivel Outlet

The following parts can be replaced. Refer to Section 6, Illustrated Parts, for stock numbers.

Flush button: complete assembly or individual components
Flush valve: replacement only
Check valve: flapper valve, o-ring, adapter, complete assembly
Air entrainment valve: air inlet valve, regulator/adapter assembly, disconnect valve and related o-rings
Swivel outlet: outlet, body, washers, o-rings, spring, circlip, hook

Note: The swivel body and the hook have been redesigned so the hook retainer screws into the body. Replace the old style hook and swivel body together.

1. Disconnect all pipeline hoses from the wall and the Excel, close all gas cylinders, unplug the power cord and set the system master switch to "OFF."

2. Remove the screws securing the tray top retainers. Lift off the retainers and the tray.

   Note: Current production Excels use two screws and spacers to attach the retainers. Earlier Excels used two bolts. Figure 5-3 shows both versions.

3. Remove the common gas outlet:

   a. Disconnect the tubing.

   b. Slide the common gas outlet back, until the flush button clears the front panel.

   c. Remove the two mounting screws.

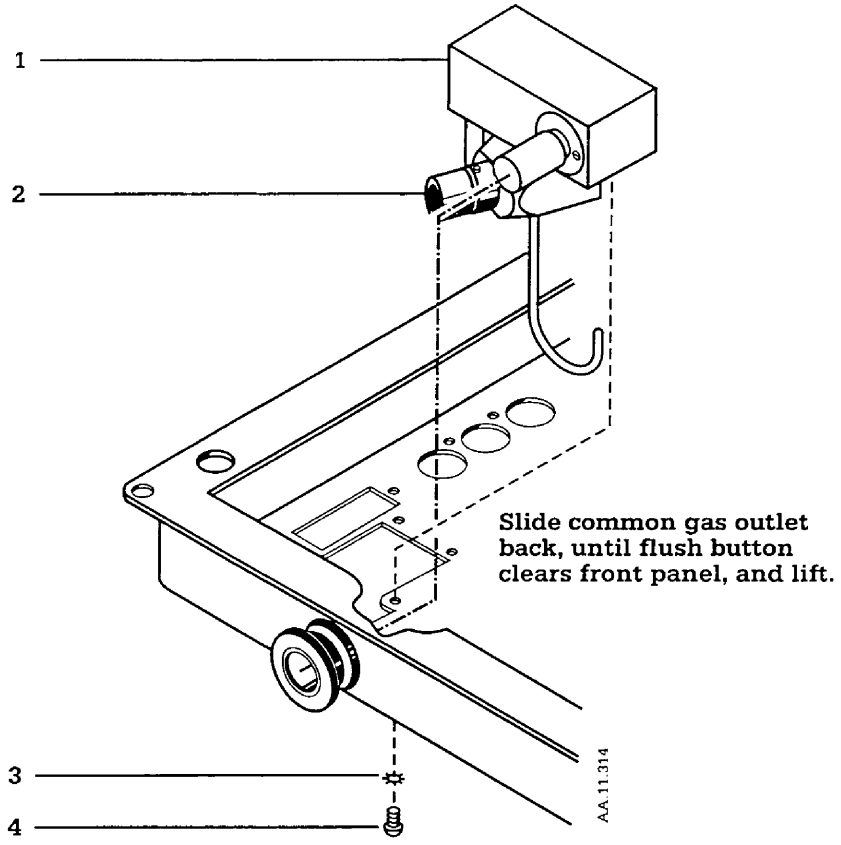

1. Common Gas Outlet
2. Outlet Fitting
3. Washer
4. Mounting Screws

Figure 5-14 Removing the common gas outlet.

4. Servicing the flush valve and button:

   a. Remove the two retaining screws and lift out the flush button assembly.

   b. To replace the valve:

      - Unscrew the Schrader valve. Use a Schrader valve stem extractor.
      - If the Schrader valve cannot be removed, remove the O_2 fitting and push the valve out from the opposite side.
      - Screw in a new Schrader valve and, if necessary, install the O_2 fitting.

c. To service the flush button:

- Remove the retaining ring and slide out the flush button.
- Lightly coat the replacement o-rings with Krytox (approved O_2 service lubricant). Then, replace the small o-ring on the button shaft and the large o-ring on the flush button adapter.
- Slide the flush button back into the fitting and replace the retaining ring.

d. Install the flush button assembly and tighten the screws.

5. To service the check valve:

a. Unscrew the check valve housing.

b. Remove the o-ring and the flapper valve.

c. Lightly coat the replacement o-ring with Krytox (approved O_2 service lubricant).

d. Make sure that the replacement flapper valve is clean and dry.

e. Replace the o-ring and the flapper valve.

f. Screw the check valve housing back into place.

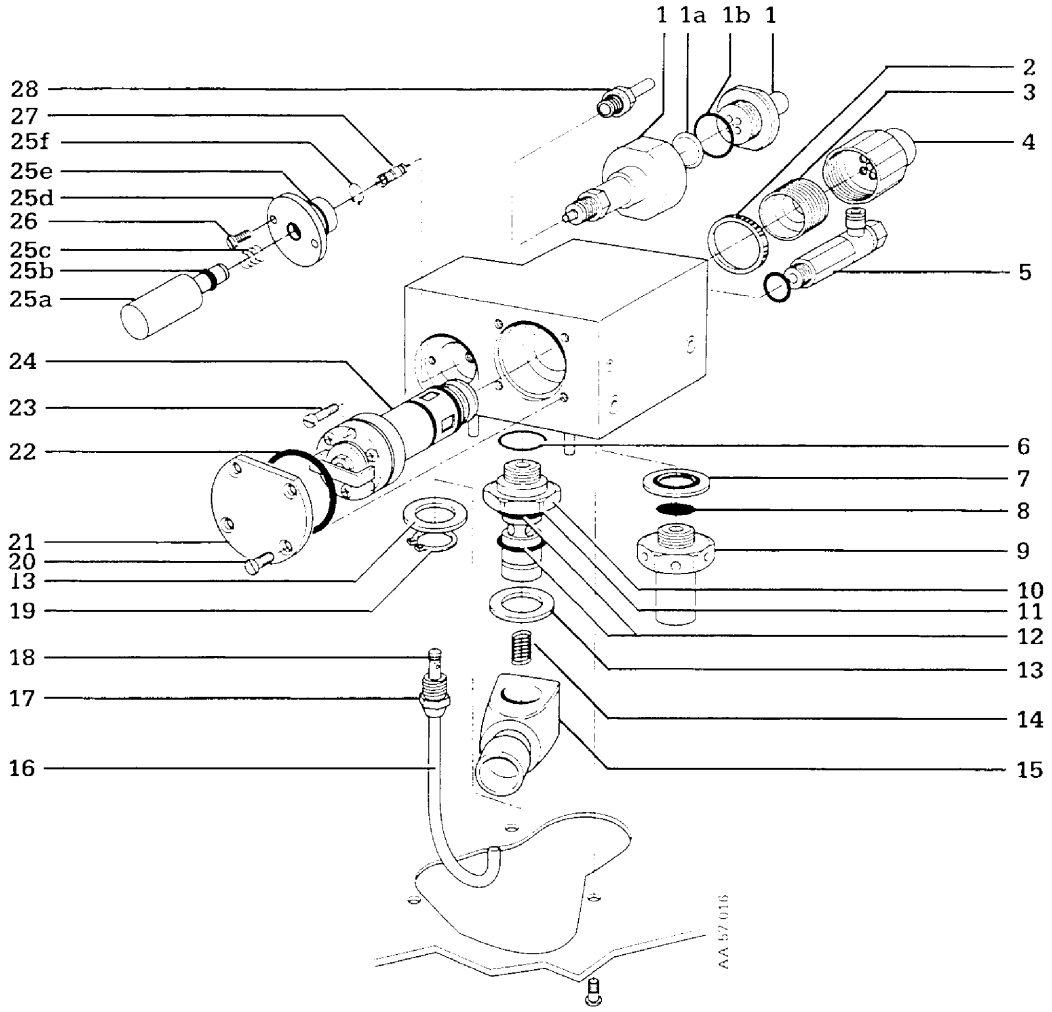

1. Check Valve Assembly
   a. Flapper Valve
   b. O-Ring
2. Lock Ring (Air Entrainment Valve)
3. Adapter (Air Entrainment Valve)
4. Air Inlet Valve
5. Disconnect Valve Regulator
6. O-Ring
7. Seal Bonded
8. Screen Gas Inlet (Filter)
9. Pressure Relief Valve
10. Swivel Outlet Body
11. Spring (Circular)
12. O-Rings (2)
13. Washers (2)
14. Spring (Compression)
15. Outlet Swivel
16. Hook Common Gas Outlet ISO
17. Hook Retainer
18. Retaining Ring 0.156 Shaft
19. Circlip
20. Screw (4)
21. Cover Plate
22. O-Ring
23. Screw (3)
24. Disconnect Valve w/ O-Ring
25. O2 Flush Button
    a. Button
    b. O-Ring
    c. Spring
    d. Adapter
    e. O-Ring
    f. Retaining Ring
26. Screw (2)
27. Schrader Valve
28. Fitting Straight Tubing 6 mm

Figure 5-15 Servicing the common gas outlet (swivel style)

6. To replace the disconnect valve:

   a. Remove the cover plate and the o-ring.

   b. Unscrew and remove the three screws that mount the valve.

   c. Pull out the disconnect valve. Use the bracket for leverage.

   d. Fit the replacement valve into the common gas outlet.

   e. Install and evenly tighten the three screws that mount the valve.

   f. Lightly coat the new o-ring with Krytox (approved O_2 service lubricant).

   g. Install the o-ring and the cover plate. Evenly tighten the four screws.

7. To replace the air inlet valve:

   a. Unscrew the valve.

   b. Remove the silicon sealant from the threads on the common gas outlet.

   c. Apply silicon sealant to the threads of the new air inlet valve and install the valve.

8. To service the swivel outlet or replace any of the related, o-rings, washers, or the spring:

   Note: The circular spring shown in Figure 5-15 is not present on all units.

   a. Remove the circlip and slide the outlet fitting off the body.

   b. Lightly coat the replacement o-rings with Krytox (approved O_2 service lubricant) and install them on the outlet body.

   c. Inspect the swivel washers for damage. If necessary replace the washers.

   d. Assemble the outlet and install the circlip.

9. Line the flush button up with the hole in the front panel and slide the common gas outlet forward.

10. Install and tighten the mounting screws that attach the common gas outlet and reconnect the tubing.

11. Complete Sections:

    3.1, Excel Tests
    3.2, System Check-Out

C. French (Dual Outlet and Flush Assembly)

Note: The French Flush assembly is separate from the dual common gas outlet.

The following parts can be replaced. Refer to Section 6, Illustrated Parts, for stock numbers.

Flush button: complete assembly or individual components
Flush valve: replacement only
Check valve: flapper valve, o-ring, adapter, complete assembly
Internal seals: Main gasket, shaft o-ring and cup seals (block unused outlet)
Microswitch: switch, wire harness

1. Disconnect all pipeline hoses from the wall and the Excel, close all gas cylinders, unplug the power cord and set the system master switch to "OFF."

2. Remove the screws securing the tray top retainers. Lift off the retainers and the tray.

   Note: Current production Excels use two screws and spacers to attach the retainers. Earlier Excels used two bolts. Figure 5-3 shows both versions.

3. Remove the common gas outlet:

   Note: You must remove the common gas outlet to access the flush valve.

   a. Disconnect the tubing.

   b. Disconnect the switch wires.

   c. Remove the three mounting screws and maneuver the check valve through the cut out.

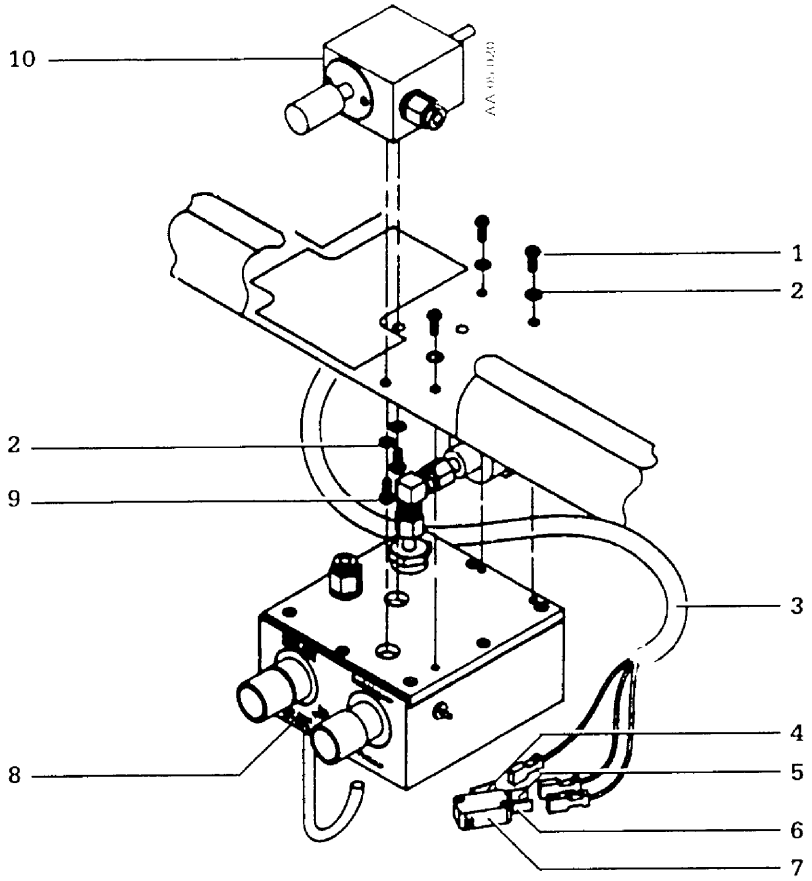

1. Mounting Screws (DCGO)
2. Washers
3. Wire Harness
4. Common (COM)
5. Normally Open (NO)
6. Normally Closed (NC)
7. Microswitch
8. Dual Common Gas Outlet (DCGO)
9. Mounting Screws (Flush Assembly)
10. Flush Assembly

Figure 5-16 Removing the common gas outlet.

Note: Skip step 4 if flush valve or button service is not required.

4. Servicing the flush valve and button:

   a. Remove the two retaining screws that attach the Flush button assembly.

   b. Slide the Flush assembly back, until the flush button clears the front panel.

   c. Remove the screws and lift out the flush button assembly.

   d. To replace the valve:

- Unscrew the Schrader valve. Use a Schrader valve stem extractor.
- If the Schrader valve cannot be removed, remove the O_2 fitting and push the valve out from the opposite side.
- Screw in a new Schrader valve and, if necessary, install the O_2 fitting.

e. To service the flush button:

- Remove the retaining ring and slide out the flush button.
- Lightly coat the replacement o-rings with Krytox (approved O_2 service lubricant). Then, replace the small o-ring on the button shaft and the large o-ring on the flush button adapter.
- Slide the flush button back into the fitting and replace the retaining ring.

f. Install the flush valve and tighten the screws.

g. Install the flush assembly. Line the flush button up with the hole in the front panel and slide the common gas outlet forward.

h. Install the screws and lock washers.

i. Reconnect the O_2 gas supply to the flush assembly.

Note: Skip step 5 if check valve service is not required.

5. To service the check valve:

a. To replace the entire check valve, unscrew the housing.

b. Remove the o-ring and the flapper valve.

c. Lightly coat the replacement o-ring with Krytox (approved O_2 service lubricant).

d. Make sure that the replacement flapper valve is clean and dry.

e. Replace the o-ring and the flapper valve.

f. If necessary, install the check valve housing.

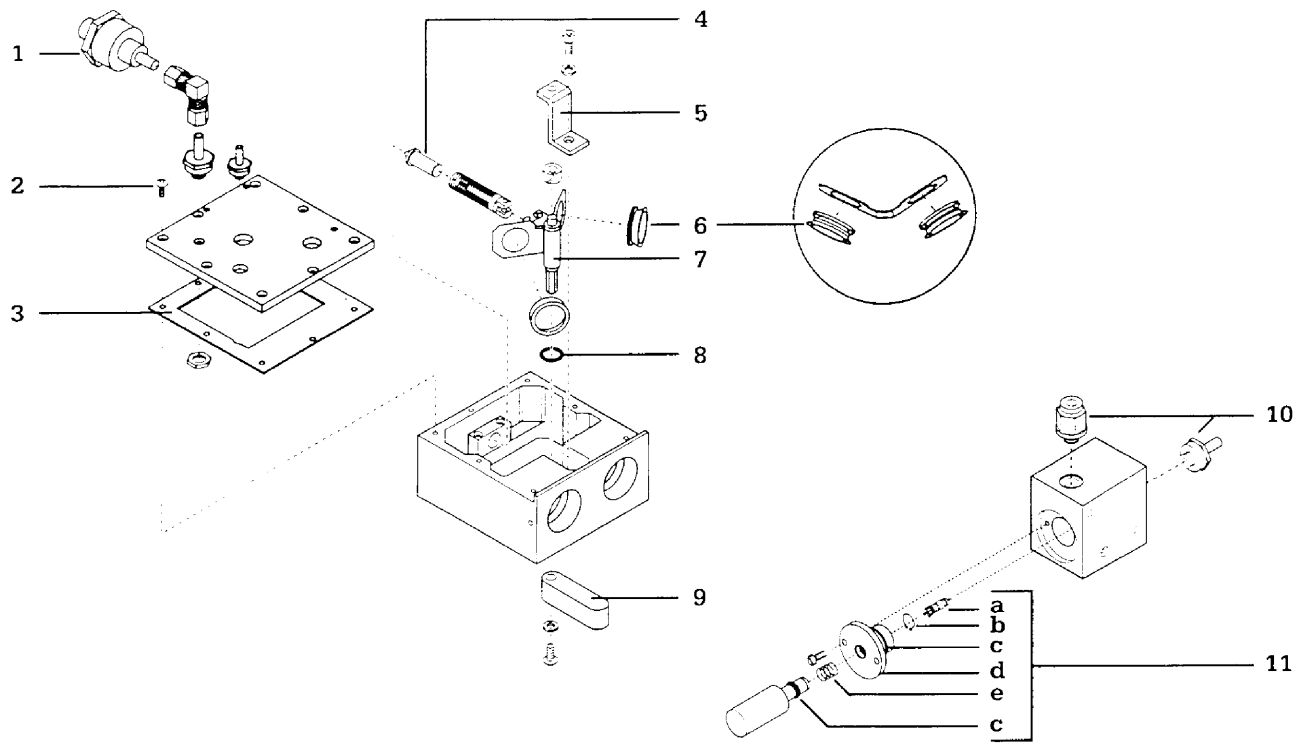

1. Check Valve Housing
2. Mounting Screws (Cover)
3. Gasket
4. Pivot Pin
5. Bracket
6. Valve Seals
7. Shaft
8. Shaft O-Ring
9. Lever
10. Oxygen Fitting
11. Flush Valve Assembly
    a. Schrader Valve
    b. Lock Ring
    c. O-Ring
    d. Retaining Ring
    e. Spring

Figure 5-17 Servicing the common gas outlet

Note: Skip step 6 if the selector valve seals and main gasket do not require service.

6. To service the gaskets and seals:

   a. Remove the eight screws that attach the cover and lift it off.

   b. Remove and discard the old gasket.

   c. Remove the bracket that fits over the shaft.

   d. Remove the lever. Unscrew the mounting screw and gently pry the lever off of the shaft.

e. Maneuver the pivot pin out of the rear support and remove the selector valve assembly.

f. Remove and discard the shaft o-ring and the valve seals.

g. Lightly coat a new o-ring with Krytox (approved O_2 service lubricant) and install it on the shaft.

g. Moisten the new valve seals for easier insertion. Fit the new valve seals into the valve plate with the flat side pointing toward the rear of the common gas outlet and the larger, cupped side pointing toward the outlets.

h. Install the shaft assembly. While sliding the shaft through the hole, compress the spring and fit the pivot pin into the rear support.

i. Make sure that the nylon washers are in position. If necessary, compress the spring and realign the pivot assembly.

j. Install the bracket and tighten the mounting screw.

k. Pivot the shaft so that the auxiliary outlet is blocked off, point the lever toward the ventilator outlet and slide it back onto the shaft. Secure the lever with the mounting screw.

l. Set the selector switch to the ventilator position and make sure that:

- A valve seal blocks the auxiliary outlet.
- There is continuity between the "COM" and "NO" terminals of the electrical switch.
- There is an open circuit between the "COM" and the "NC" terminals of the electrical switch.

m. Set the selector switch to the auxiliary position and make sure that:

- A valve seal blocks the ventilator outlet.
- There is continuity between the "COM" and "NC" terminals of the electrical switch.
- There is an open circuit between the "COM" and the "NO" terminals of the electrical switch.

n. Install a new main gasket and reattach the cover. Evenly tighten all cover mounting screws.

7. Fit the check valve through the cutout.

8. Install and tighten the mounting screws that attach the common gas outlet.

9. Reconnect the tubing as shown in Figure 5-16.

10. On a French Excel (dual common gas outlet), reconnect the switch wires.

11. Complete Sections:

    3.1, Excel Tests
    3.2, System Check-Out

5.9 Servicing or Replacing the Flowmeter Module

The following parts can be replaced. Refer to Section 6, Illustrated Parts, for stock numbers.

Complete module: Replacement
Flowtube assemblies: Replace; clean; o-ring or filter replacement
Check valve: Rebuild
Secondary regulators: Rebuild. Refer to Section 5.10, Rebuilding Secondary Regulators
Needle Valves: Replace. Refer to Section 5.11, Replacing Needle Valves.

Important: Always make sure that you have the correct labels before starting. Flowtube assembly service kits are the only kits that include labels. Because of national color coding, **labels are not included with** the complete flowmeter module or the needle valve assemblies. If you do not know which labels you need, refer to Section 6, Illustrated Parts.

A. Complete Replacement

1. Disconnect all pipeline hoses from the wall and the Excel, close all gas cylinders, unplug the power cord and set the system master switch to "OFF."

2. Remove the flowmeter shield.

3. Remove the rear flowmeter panel.

4. Disconnect flowmeter inputs and output.

5. Remove the two flowmeter mounting screws and lift out the flowmeter module.

   Note: Keep track of the spacers. Make sure that they do not fall behind the flowmeter module.

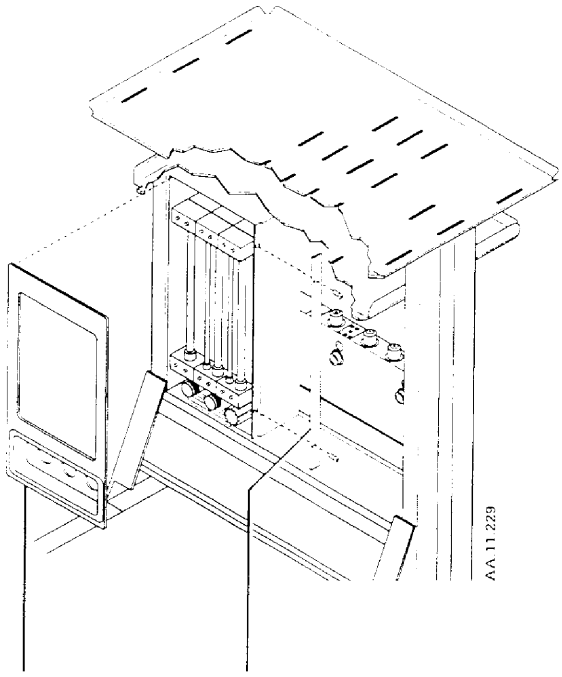

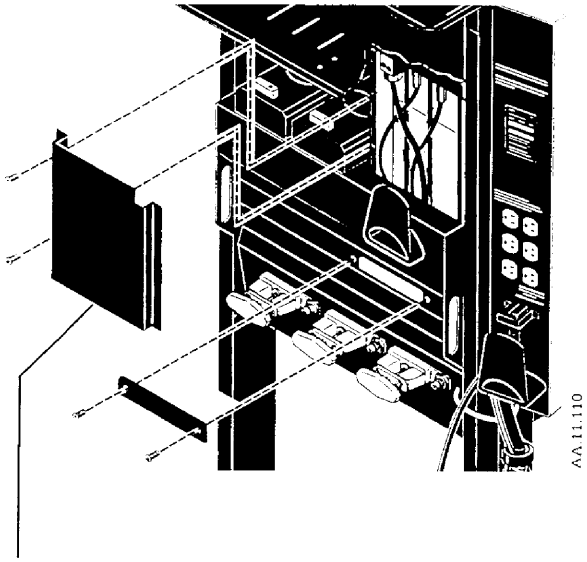

1. Flowmeter Shield
2. Retainer
3. Rear Panel

Figure 5-18 Removing the flowmeter shield and access panel

6. Remove the side panels from the spring clips. Then, remove the spring clips from the flowmeter.

7. Install the labels on the flowmeter module. Peel the backing off. Reapply the backing leaving one eight inch of the adhesive exposed along a vertical edge. Slide the label behind the flowtubes and align the label. Tack the label in place. Then, remove the backing and press the label onto the panel.

8. Install the spring clips on the new flowmeter module. Slide the spring clips between the flowtube assemblies and the pillars. Reattach the side panels.

9. Slide the two mounting screws through the back panel and slide the spacers onto the mounting screws.

10. Install the flowmeter module and tighten the mounting screws.

11. Reconnect the gas output and inputs to the flowmeter module.

12. Install the rear flowmeter panel.

13. Complete Sections:

    3.1, Excel Tests
    3.2, System Check-Out

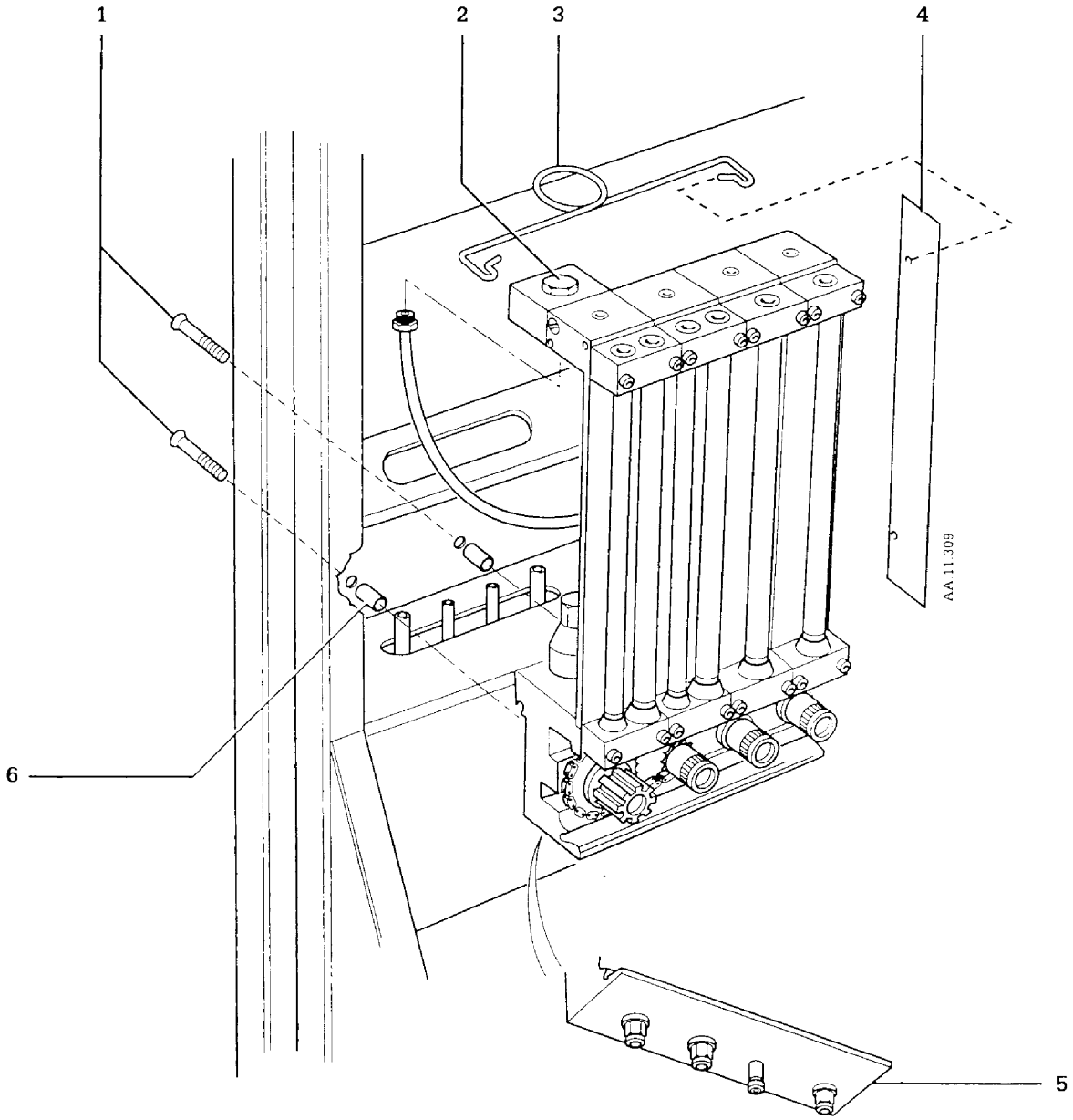

1. Screws (2)
2. Check Valve
3. Spring Clips (2)
4. Side Panels (2)
5. Gas Inputs
6. Spacers

Figure 5-19 Removing the flowmeter module

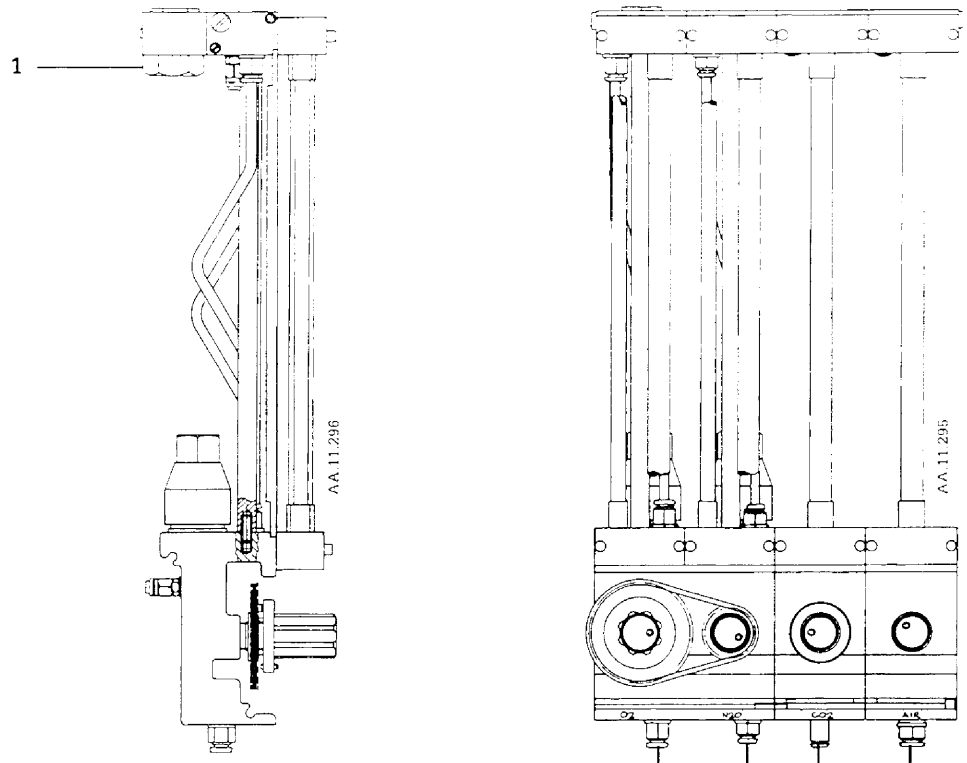

1. Mixed Gas Output
2. Air Input
3. CO_2 Input
4. N_2O Input
5. O_2 Input

Figure 5-20 Flowmeter module connections

B. Check Valve Repair

1. Disconnect all pipeline hoses from the wall and the Excel, close all gas cylinders, unplug the power cord and set the system master switch to "OFF."

2. Remove the rear flowmeter panel.

3. Disconnect the flowmeter mixed gas output.

4. Remove the check valve. Unscrew the plug and the outlet fitting. Note the height of the flapper valve stem within the block. Then, remove and discard the flapper valve and the o-rings.

5. Make sure that the new flapper valve is clean and dry. Then, pull the flapper valve into position. When the valve is in position, trim the stem to the correct length.

6. Lightly coat the new o-rings with Krytox (approved O_2 service lubricant) and reassemble the check valve.

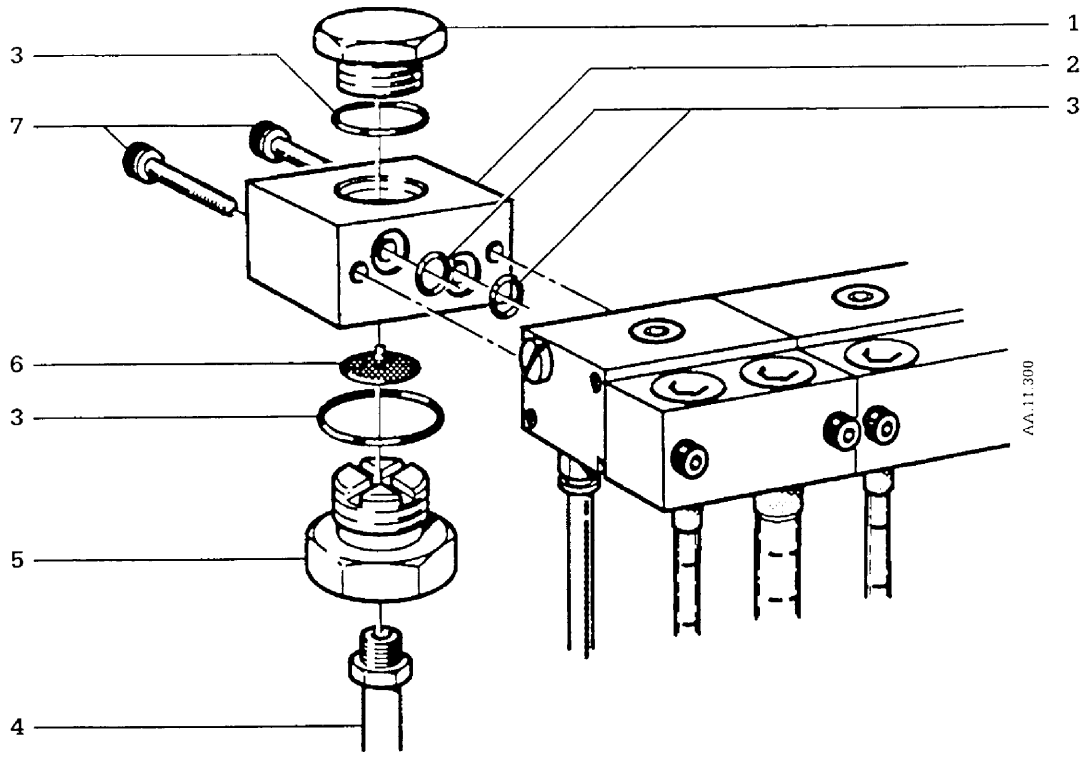

1. Plug
2. Check Valve Housing
3. O-Rings
4. Flowmeter Outlet Tube
5. Outlet Fitting
6. Flapper Valve
7. Mounting Screws (Check Valve Housing)

Figure 5-21 Servicing the flowmeter check valve

7. Mount the check valve. Make sure that the o-rings between the valve and the flowmeter module are seated correctly.

8. Reconnect the mixed gas output.

9. Install flowmeter rear panel, and complete Sections:

   3.1, Excel Tests
   3.2, System Check-Out

C. To Service Flowtube Assemblies

⚠WARNING: Floats are calibrated to a specific tube. Interchanging floats causes incorrect readings. To avoid confusion, disassemble and clean only one flowtube assembly at a time.

⚠CAUTION: Disassemble the flowtube assemblies only when service is required. Excessive cleaning can remove the antistatic coating from inside

the tube. Any damage to the float, means that you must replace the entire flowtube assembly.

1. Disconnect all pipeline hoses from the wall and the Excel, close all gas cylinders, unplug the power cord and set the system master switch to "OFF."

2. Remove the flowmeter shield (Figure 5-18).

3. Remove the mounting screws that attach the flowtube assembly.

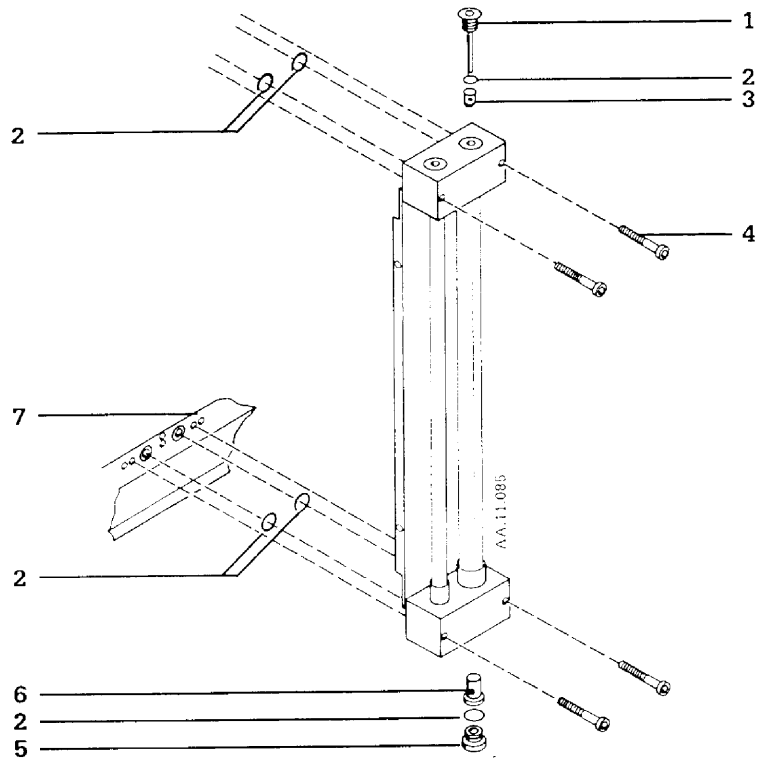

1. Top Float Stop
2. O-Ring
3. Float
4. Screws (4)
5. Bottom Plug
6. Filter
7. Lower Flowmeter Manifold

Figure 5-22 Removing the flowtube assemblies

4. Pull back the spring clips and remove the flowtube assembly.

5. To service the tube:

   a. Unscrew and remove the top float stop and the bottom plug from each tube.

b. Inspect the top float stop. Replace it if there is any sign of wear or damage.

c. Completely clean, rinse and dry the flowtube. Use hospital grade alcohol and the flowtube brush.

d. Replace the o-rings and the filter, if required. Lightly coat all o-rings with Krytox (approved O_2 service lubricant)

e. Reassemble the tube.

6. If you are replacing a flowtube assembly, install the label. Peel the backing off. Reapply the backing leaving one eighth inch of the adhesive exposed on a vertical side of the label. Use this edge to position the label. When the label is in place, remove the backing and press it into position.

7. Replace the flowtube assembly:

   a. Make sure that the o-rings are lightly coated with Krytox (approved O_2 service lubricant) and centered on the flowmeter manifold (Krytox should hold them in place).

   b. Install and tighten the mounting screws.

   c. Pull back on the spring clips and position the side panels.

8. Install the flowmeter shield, and complete Sections:

   3.1, Excel Tests
   3.2, System Check-Out

5.10 Rebuilding Secondary Regulators

⚠WARNING: This manual specifies Krytox as an oxygen service lubricant. Do not use any lubricant on the Excel that is not specifically approved for use on anesthesia or oxygen equipment. Oil and grease based lubricants burn violently when exposed to oxygen.

Refer to Section 6, Illustrated Parts, for a listing of secondary regulator components and/or the rebuild kit.

1. Disconnect all pipeline hoses from the wall and the Excel, close all gas cylinders, unplug the power cord and set the system master switch to "OFF."

2. Remove flowmeter rear panel and the access panel covering the secondary regulator test ports.

3. Assemble the test fixture. Refer to Section 6.6, Test Fixtures, for test fixture information.

4. Connect the test fixture to the test fitting.

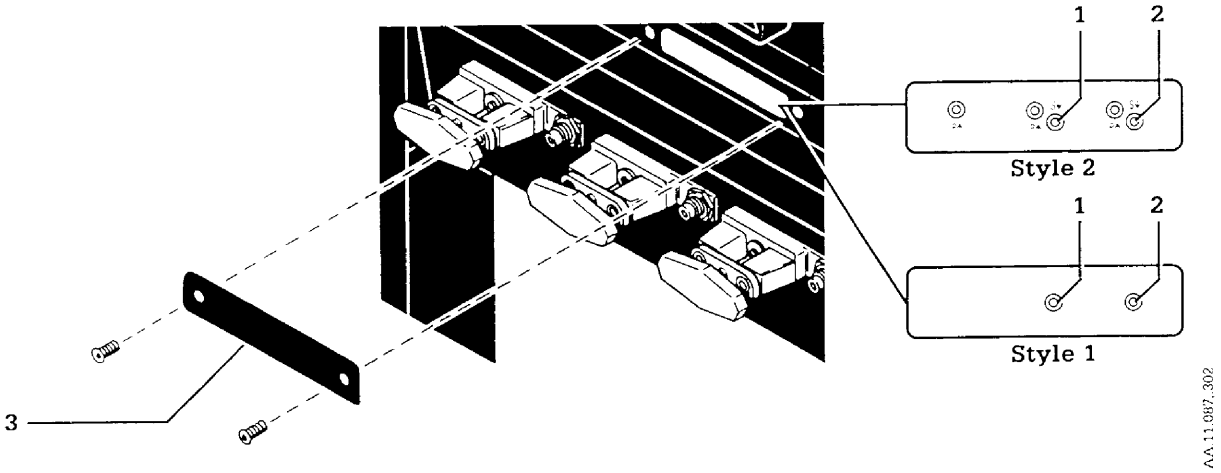

1. N_2O Secondary Regulator Test Fitting
2. O_2 Secondary Regulator Test Fitting
3. Access Panel

Figure 5-23 Secondary regulator test points

5. Supply O_2 and N_2O to the Excel (open cylinder valves or connect pipeline supplies).

6. Set the system master switch to "ON."

7. Apply a leak detection solution to the test connection and check that there are no leaks.

8. Set the gas flows to 2 L/min, plug the orifice on the test fixture, and record the secondary regulator pressures. Adjusting the rebuilt regulator for the same output should simplify link system calibration.

9. Disconnect all pipeline hoses from the wall and the Excel, close all gas cylinders, unplug the power cord and set the system master switch to "OFF."

   Note: Complete steps 10 through 12 (remove the flowmeter module) only if you need better access to the secondary regulators.

10. Disconnect flowmeter inputs and output.

11. Remove the flowmeter shield.

12. Remove the two flowmeter mounting screws and lift out the module. Do not loose the spacers.

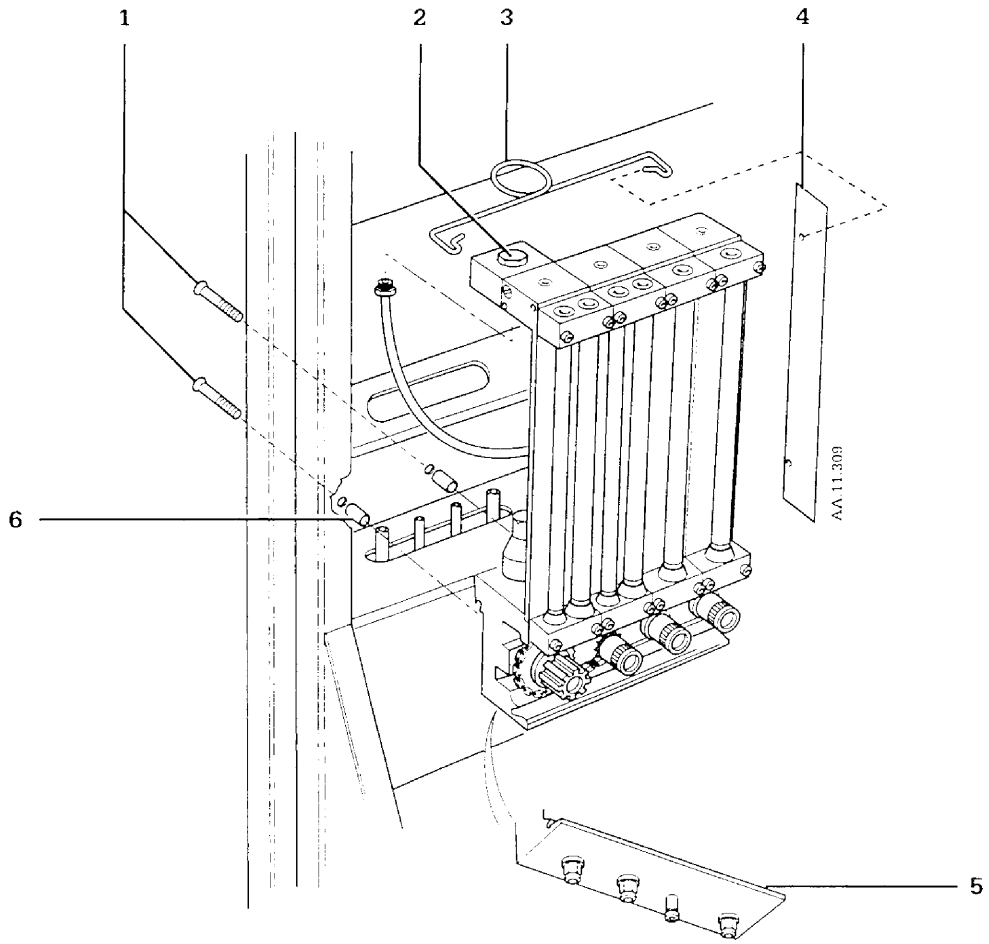

1. Screws (2)
2. Check Valve
3. Spring Clips (2)
4. Side Panels (2)
5. Gas Inputs
6. Spacers

Figure 5-24 Removing the flowmeter module

13. Carefully remove the label from the secondary regulator.

14. Turn the adjustment screw counter-clockwise until it is about 3 mm (1/8 inch) above the housing (Figure 5-25).

15. Locate the small hole in the regulator housing. Mark this position on the outside of the adapter plate.

    Note: If the hole is not visible, it is facing the flowtubes. Mark the rear center instead.

16. Remove all regulator components above the adapter plate.

17. Remove the screws that mount the adapter plate and disassemble the rest of the regulator.

18. Replace all components under the adapter plate with new components from the regulator rebuild kit. Lightly coat the o-rings with Krytox (approved O_2 service lubricant) and carefully center the components to avoid leaks.

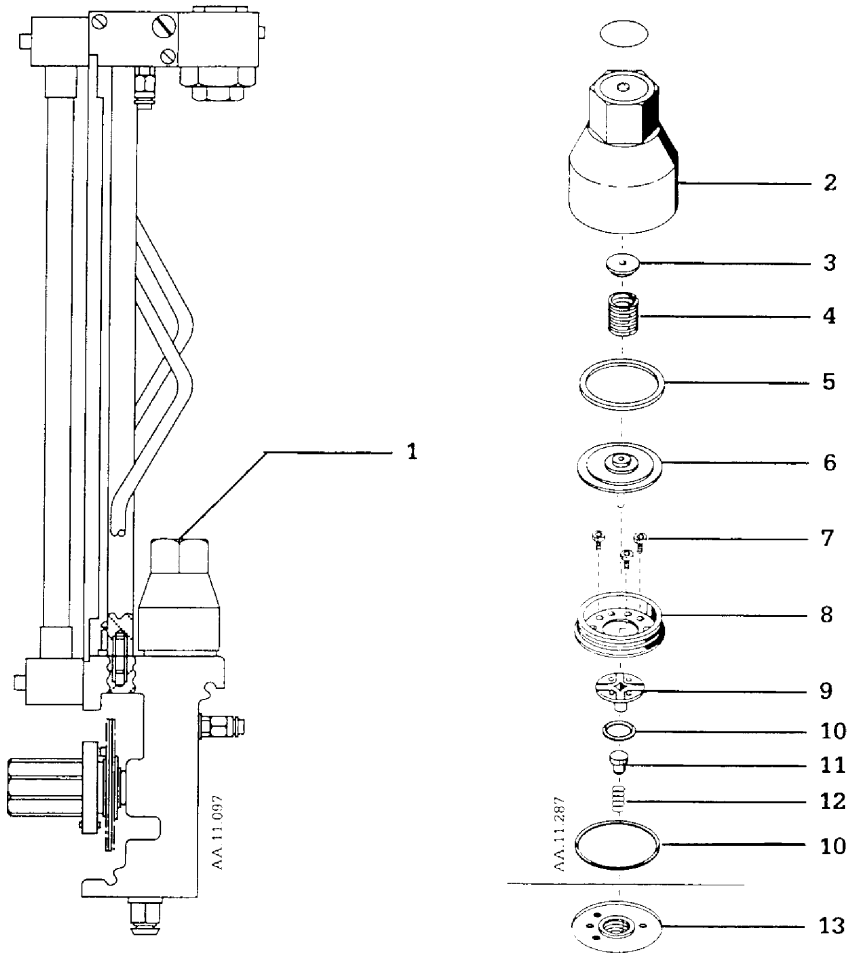

1. Adjustment Screw
2. Regulator Housing
3. Upper Spring Retainer
4. Spring
5. Slip Ring
6. Diaphragm (Incorporates Lower Spring Retainer)
7. Mounting Screws
8. Adapter Plate
9. Seat
10. O-Ring
11. Valve
12. Spring
13. Valve Mount (Part of Manifold)

Figure 5-25 Rebuilding the secondary regulator

19. Position the adapter plate:

    Note: The hole in the regulator housing lets you leak check the diaphragm. It must be visible when the regulator is reassembled.

    - If you marked the position of the hole, align the adapter plate so that the mark is visible from the back of the flowmeter module.
    - If you marked the back of the adapter plate because the hole was hidden, align the adapter plate so that the mark points toward the flowtubes.

20. Install the adapter plate and fully tighten the mounting screws.

21. Leak test the valve seat:

    a. Connect a vacuum squeeze bulb to flowmeter module input for the regulator that you rebuilt (either N_2O or O_2).

    b. Squeeze and release the hand-bulb on the test device until the bulb is fully collapsed. If the bulb inflates in less than 30 seconds, there is a leak in the seat.

    c. If there is a leak, remove the adapter plate, and center the two halves of the valve seat, the spring and the o-rings. Install the adapter plate and repeat this test.

    Note: Complete steps 22 through 24 only if you removed the flowmeter module.

22. Slide the two flowmeter mounting screws through the back panel and slip the spacers onto the mounting screws.

23. Install the flowmeter module and tighten the mounting screws.

24. Reconnect the gas output and inputs to the flowmeter module.

25. Reassemble the upper half of the regulator. Note that the lower spring retainer has a central orifice and the upper spring retainer has a central indentation.

26. Reassemble the regulator and align the internal components:

    a. Start the housing on the adapter plate. Leave the housing loose.

    b. Remove the adjustment screw.

    c. Set the needle valves to maximum.

    d. Supply gas to the flowmeter module; connect gas supplies and set the system master switch to "ON."

e. Insert a hex key through the adjustment screw hole. Press down and release the spring/diaphragm assembly three times.

f. Press down on the spring/diaphragm assembly and finger tighten the housing. Release the spring/diaphragm assembly.

g. Torque the housing to 11.3 N-m (100 lb-in).

h. Apply Loctite 242 (or the approved equivalent) to the set screw. Install and tighten the screw until the flowtubes shows maximum flow (set screw almost flush).

27. Leak check the diaphragm. Apply leak detection solution to the small hole in the regulator housing. Any bubbles indicate a leak in the diaphragm.

28. Repeat this procedure for the other regulator if necessary.

29. Complete the low pressure leak check on the secondary regulator:

a. Attach the test device to the common gas outlet.

⚠ **CAUTION: Failure to perform the next step can damage the test device pressure gauge.**

b. Fully open the test device needle valve.

c. Remove all vaporizers from the vaporizer manifold.

d. Connect gas supplies and set the system master switch to "ON."

e If the Excel has a Air/N_2O selector switch, set the switch to N_2O.

f. Adjust the test device control until the gauge reads zero.

g. Adjust the N_2O flow control to obtain a flow of 0.4 L/min through the test device.

h. Check that the test gauge continues to read zero.

i. Set the test pressure:

- In the UK, adjust the test device control until the test gauge reads 20 kPa.
- Outside the UK, adjust the test device control until the test gauge reads 3 kPa.

j Check that the flow through the test device:

- In the UK, the flow must exceed 0.3 L/min.
- Outside the UK, the flow must exceed 0.35 L/min.

  Lower flows indicate excessive leakage between the flow controls and the common gas outlet. Locate and repair the leak.

k. Adjust the test device control until the test gauge reads zero.

l. Set all flow controls to minimum.

m. Set the system master switch to "OFF" and remount the vaporizers.

30. Complete Section(s):

- 4.3, Adjusting and Testing the N_2O Secondary Regulator (only if you serviced the N_2O secondary regulator)

and/or

- 4.4, Adjusting the N_2O and the O_2 Needle Valves and Link System (only if you serviced the O_2 secondary regulator).

and

- 3.1, Excel Tests (always)
- 3.2, System Check-Out (always)

5.11 Replacing Needle Valves

French Excels use different O_2 and N_2O needle valves because of different secondary regulator pressures. Refer to the Illustrated Parts Section for Stock Numbers.

Important: Each time you replace a needle valve or valves you must replace the:

- Stop screws inside the knobs (minimum flow)
- Stop screw on the O_2 flow control collar (Linkage cut in)
- Set screws used to attach flow control knobs

A. CO_2 or Air Needle Valves

Note: The additional gas flow control label must be ordered separately or reused. Also save the stop collar, the stop ring, and the set screws that attach these items for reuse.

1. Disconnect all pipeline hoses from the wall and the Excel, close all gas cylinders, unplug the power cord and set the system master switch to "OFF."

2. Remove the flowmeter shield.

3. Remove and discard the three set screws that attach the flow control knob. Remove the knob and carefully peel off the label. Also remove the stop collar. Save the label, the stop collar, and the stop collar set screws for reuse.

4. Unscrew the needle valve. Remove the stop ring.

⚠ **WARNING: Failure to properly torque flow control components may result in incorrect proportioning and hypoxic mixtures.**

5. Lightly coat the o-ring with Krytox (approved O_2 service lubricant) and screw in the new needle valve. Torque the needle valve to 7.2 N-m (60 lb-in).

6. Install the stop ring on the needle valve body, flush against the manifold with the tab facing out. Torque the stop ring set screws to 0.6 N-m (5 lb-in).

7. Complete Sections:

   4.5, Adjusting Additional Gas Flow
   3.1, Excel Tests
   3.2, System Check-Out

B. N_2O or O_2 Needle Valves

Note: O_2 and N_2O flow control labels must be ordered separately or reused. Some needle valves include knobs and o-rings, others do not. Always check the Illustrated Parts Section to check kit contents.

1. Disconnect all pipeline hoses from the wall and the Excel, close all gas cylinders, unplug the power cord and set the system master switch to "OFF."

2. Remove the flowmeter shield.

3. Remove and discard the three set screws that attach the O_2 flow control knob. Remove the knob and carefully peel off the label for reuse.

4. Remove and discard the three set screws that attach the N_2O flow control knob. Remove the O_2 needle valve - chain link - and N_2O knob together. Save the necessary parts for reuse.

Note: The O_2 needle valve has left hand threads, turn it clockwise to unscrew the valve. You must remove the O_2 needle valve even if you are only replacing the N_2O needle valve.

5. If necessary, unscrew the N_2O needle valve. Coat the o-rings on the replacement valve with Krytox (approved O_2 service lubricant).

⚠ **WARNING: Failure to properly torque flow control components may result in incorrect proportioning and hypoxic mixtures.**

6. If necessary, install the N_2O needle valve. Torque the N_2O needle valve to 7.2 N-m (60 lb-in).

7. Install new set screws in the N_2O and the O_2 flow control knobs.

8. Coat the o-rings on the O_2 needle valve with Krytox (approved O_2 service lubricant). Then, install the O_2 needle valve. Torque the O_2 needle valve to 7.2 N-m (60 lb-in). Do not install the chain or N_2O knob.

   Note: The O_2 needle valve has left hand threads, turn it counter-clockwise to screw in the valve

9. Complete Sections:

   4.4, Adjusting the N_2O and the O_2 Needle Valves and Link System
   3.1, Excel Tests
   3.2, System Check-Out

5.12 Servicing Gas Supply Modules

⚠ **WARNING: This manual specifies Krytox as an oxygen service lubricant. Do not use any lubricant on the Excel that is not specifically approved for use on anesthesia or oxygen equipment. Oil and grease based lubricants burn violently when exposed to oxygen.**

Gases, fittings and pressures vary from model to model. Refer to the Illustrated Parts Section for Stock Numbers.

Country	Gases	Pipeline/Cylinder Pressure	Fittings
Australia-210	O_2 cyl/pl N_2O cyl/pl Air cyl/pl	pipeline: 345kPa (50 psig) cylinder: 311-345 kPa (45-50 psig)	pipeline: Australian std cylinder: Pin indexed yoke
Austria-210	O_2 cyl/pl N_2O cyl/pl Air cyl/pl	pipeline: 414kPa (60 psig) cylinder: 380-414 kPa (55-60 psig)	pipeline: NIST cylinder: DIN

Country	Gases	Pipeline/Cylinder Pressure	Fittings
France-210	O_2 cyl/pl N_2O pl only Air pl only	pipeline: 345kPa (50 psig) cylinder: 311-345 kPa (45-50 psig)	pipeline: Air Liquide cylinder: Pin indexed yoke
German 210	O_2 cyl/pl N_2O cyl/pl O_2 cyl/Air pl	pipeline: 500 kPa (73 psig) cylinder: 380-414 kPa (55-60 psig) Reserve O_2 cylinder: 311-345 kPa (45-50 psig)	pipeline: DIN cylinder: Pin indexed yoke Reserve O_2 cylinder: DIN
ISO-110	O_2 pl only N_2O pl only	414 kPa (60 psig) pipeline only	pipeline: NIST
ISO-410/210	O_2 cyl/pl O_2 cyl only N_2O cyl/pl N_2O cyl only Air cyl/pl CO_2 cyl only	pipeline: 414kPa (60 psig) cylinder: 380-414 kPa (55-60 psig) CO_2 cylinder: 207 kPa (30 psig)	pipeline: NIST cylinder: Pin indexed yoke
Italy 110/210	O_2 pl only N_2O pl only Air pl only	414 kPa (60 psig) pipeline only	pipeline: NIST
Scandinavia 210	O_2 cyl/pl N_2O cyl/pl Air cyl/pl	pipeline: 414kPa (60 psig) cylinder: 380-414 kPa (55-60 psig)	pipeline: Spri cylinder: Pin indexed yoke
Spain-110/210	O_2 pl only N_2O pl only Air pl only	414 kPa (60 psig) pipeline only	pipeline: NIST
Switzerland - 210	O_2 cyl/pl N_2O cyl/pl Air cyl/pl	pipeline: 414kPa (60 psig) cylinder: 380-414 kPa (55-60 psig)	pipeline: DISS Male cylinder: Pin indexed yoke

A. Complete Replacement

1. Disconnect all pipeline hoses from the wall and the Excel, close all gas cylinders, unplug the power cord and set the system master switch to "OFF."

2. Remove all gas cylinders and the gas supply cover.

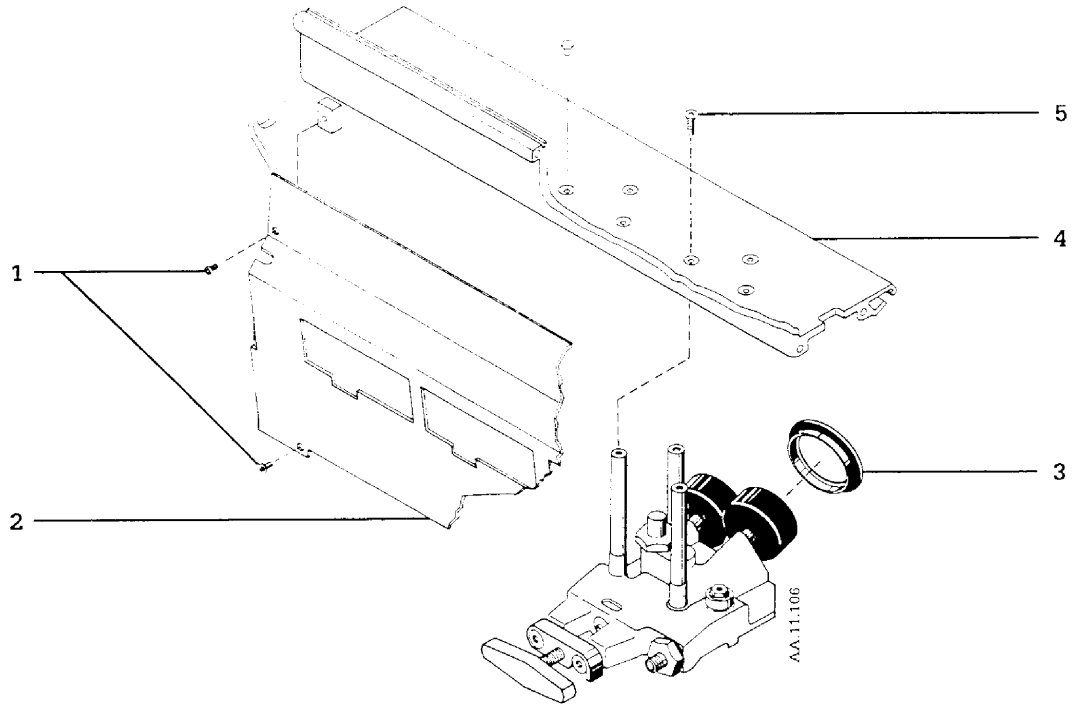

1. Screws M6x4
2. Gas Supply Cover
3. Gauge Shroud
4. Flowmeter and Gas Block Cross Member
5. Socket Screw M6

Figure 5-26 Removing the gas supply cover

Note: To remove the gas supply module mounted below the flowmeter, you must first remove the flowmeter module (Section 5.9.A).

3. Disconnect the tubing from the gas supply module.

4. Support the gas supply module and remove the three screws that attach it to the cross member.

5. Reverse these steps to install the gas supply. Then, complete Sections:

   4.3, Adjusting and Testing Primary Regulators
   3.1, Excel Tests
   3.2, System Check-Out

B. Replacing Inlet Filters

1. Disconnect all pipeline hoses from the wall and the Excel, close all gas cylinders, unplug the power cord and set the system master switch to "OFF."

2. On a cylinder connection:

   a. Remove the gas supply cylinders:

      With a pin indexed yoke, remove the old cylinder gasket.

      With a DIN connection, check the condition of the sealing ring.

   b. On Austrian and reserve O_2 German supplies, remove the cylinder adapter and the cylinder gasket.

   c. Unscrew the inlet adapter. The filter is located inside the inlet adapter and is held in place by the filter retainer.

   d. Screw a clean, 6 mm, standard thread bolt half way into the retainer. Pull out the screw to remove the retainer. Remove and discard the filter.

   e. Inspect the inlet adapter. Replace it if it has burrs or is dirty.

⚠ **CAUTION: If the bolt used to install the retainer protrudes from the retainer, you will crush or damage the new filter.**

   f. Install a new filter in the inlet adapter. Thread a clean 6 mm bolt half way into the retainer and tap the bolt with a soft headed hammer to seat the retainer. Then, unscrew the bolt.

   g. Replace the o-ring on the inlet adapter. Lightly coat the new o-ring with Krytox (approved O_2 service lubricant) before installing.

   h. Replace and tighten the inlet adapter.

   i. On Austrian or reserve O_2 German gas supply modules, replace the cylinder gasket and install the cylinder adapter.

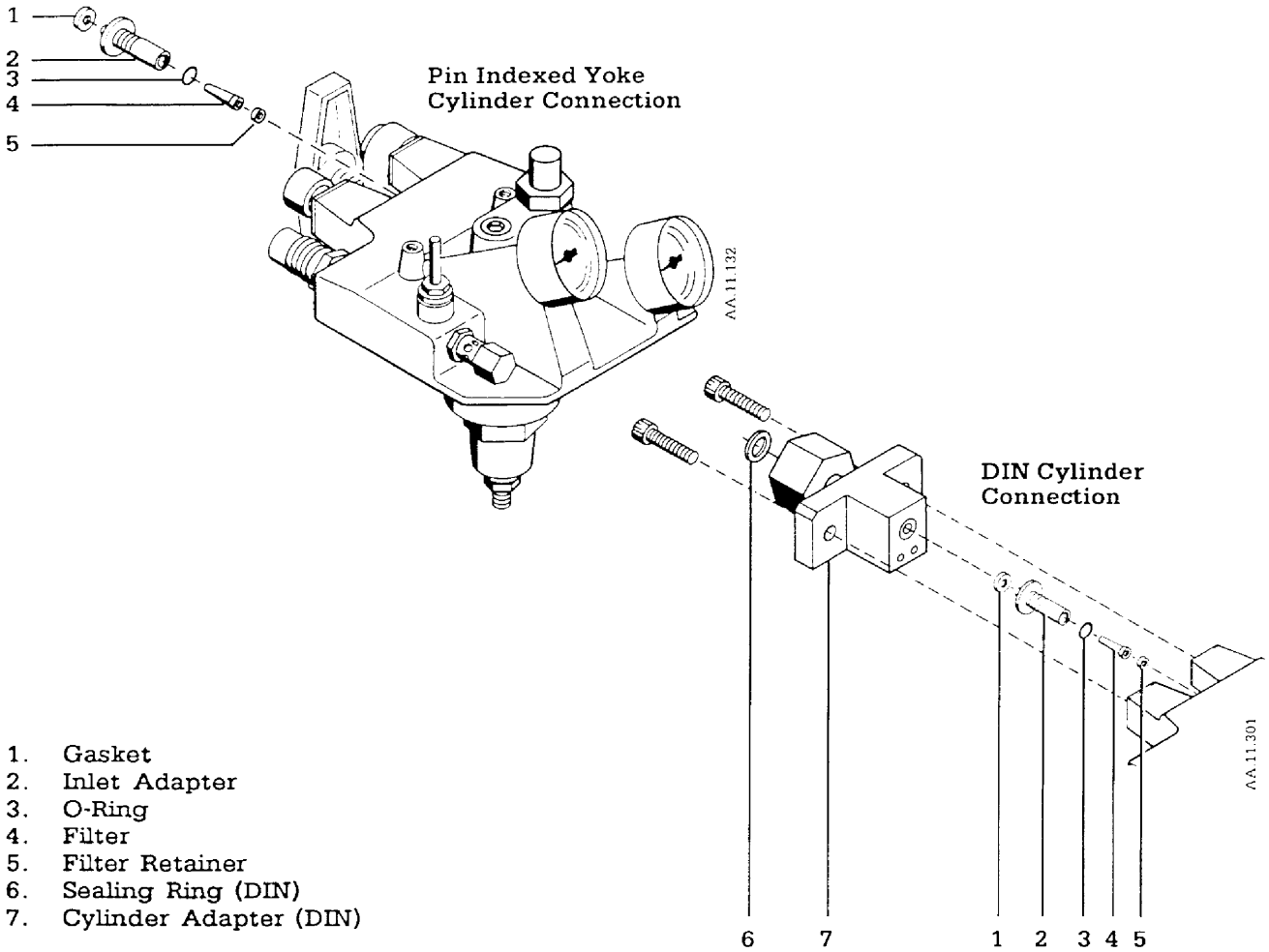

1. Gasket
2. Inlet Adapter
3. O-Ring
4. Filter
5. Filter Retainer
6. Sealing Ring (DIN)
7. Cylinder Adapter (DIN)

Figure 5-27 Servicing the cylinder inlet

3. On a pipeline inlet:

   a. Unscrew the inlet fitting.

   b. The filter is located inside the inlet fitting and is held in place by the filter retainer.

   c. Screw a clean, 6 mm, standard thread bolt half way into the retainer. Pull out the screw to remove the retainer. Remove and discard the filter.

   d. Inspect the inlet fitting. Replace it if it has burrs or is dirty.

⚠ **CAUTION: If the bolt used to install the retainer protrudes from the retainer, you will crush or damage the new filter.**

e. Install a new filter in the inlet fitting. Thread a clean 6 mm bolt half way into the retainer. Tap the bolt with a soft headed hammer to seat the retainer. Then, unscrew the bolt.

f. Replace and tighten the inlet fitting. Torque the adapter to 40.7 ± 2.0 N-m (30.0 ± 1.5 lb-ft) for O_2 or air and 54.2 ± 2.7 N-m for N_2O (40 ± 2 lb-ft).

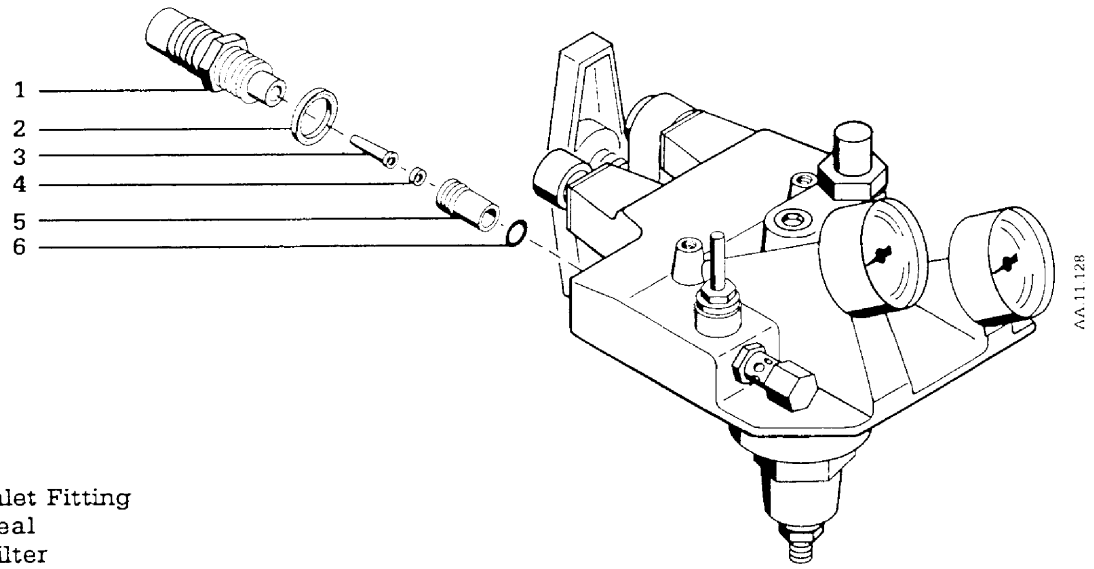

1. Inlet Fitting
2. Seal
3. Filter
4. Filter Retainer
5. Non Return Valve (Pipeline)
6. O-Ring

Figure 5-28 Servicing the pipeline inlet

4. Complete Sections:

   3.1, Excel Tests
   3.2, System Check-Out

C. Replacing the Cylinder Non Return Valve

The cylinder non return valve has no serviceable parts. Refer to Section 6, Illustrated Parts, for the Stock Number.

1. Disconnect all pipeline hoses from the wall and the Excel, close all gas cylinders, unplug the power cord and set the system master switch to "OFF."

2. Remove the gas supply module (Section A).

3. Use a hex key to remove the plug. Use a hex key to remove the cylinder non return valve.

⚠ **CAUTION: Apply Teflon tape as follows: wrap it clockwise (looking at the thread end); hold enough tension on the tape so that it lays into the threads; do not use too much tape (1-1/3 layer is adequate); do not wrap the first thread.**

4. Lightly coat the o-ring on the new cylinder non return valve with Krytox (approved O_2 service lubricant).

5. Install the cylinder non return valve. Apply Teflon tape to the plug and tighten it into place.

6. Install and reconnect the gas supply module (Section A).

7. Complete Sections:

   3.1, Excel Tests
   3.2, System Check-Out

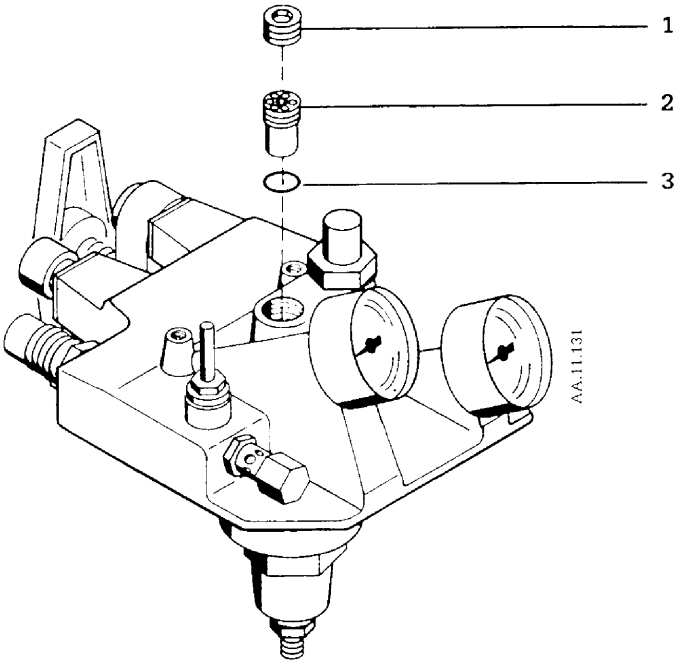

1. Plug
2. Non Return Valve (Cylinder)
3. O-Ring

Figure 5-29 Replacing the cylinder non return valve

D. Replacing the Pipeline Non Return Valve

The pipeline non return valve has no serviceable parts. Refer to Section 6, Illustrated Parts, for the Stock Number.

1. Disconnect all pipeline hoses from the wall and the Excel, close all gas cylinders, unplug the power cord and set the system master switch to "OFF."

2. Unscrew the pipeline inlet fitting. Use a hex key to remove the non return valve.

3. Lightly coat the o-ring on the new pipeline non return valve with Krytox (approved O_2 service lubricant).

4. Install the pipeline non return valve and tighten it into place.

5. Install and tighten the inlet fitting. Torque the inlet fitting to 30.0 ± 1.5 lb-ft (40.7 ± 2.0 N-m) for O_2 or air and 40 ± 2 lb-ft for N_2O (54.2 ± 2.7 N-m).

6. Complete Sections:

   3.1, Excel Tests
   3.2, System Check-Out

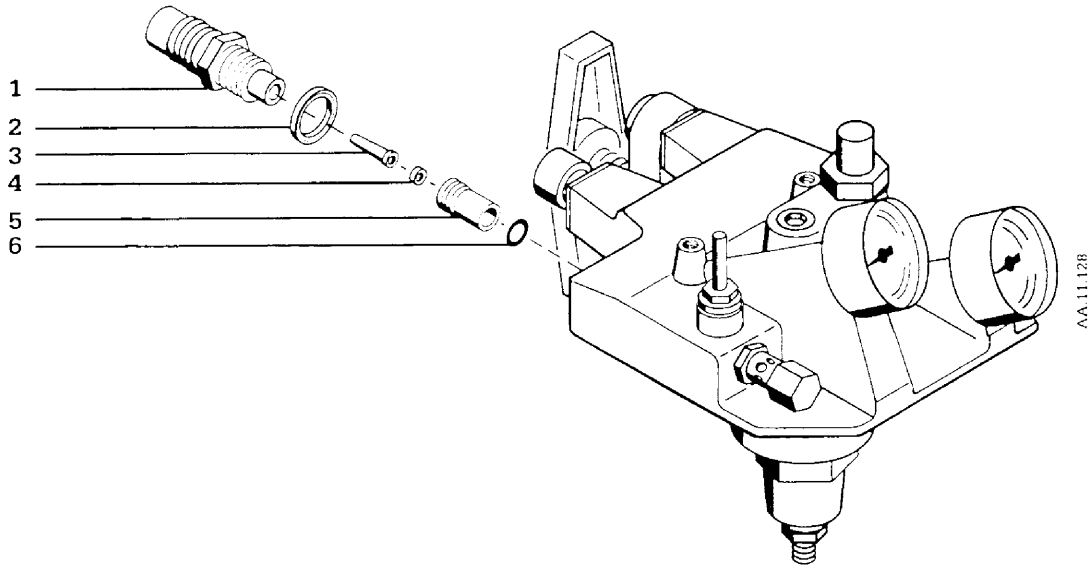

1. Inlet Fitting
2. Seal
3. Filter
4. Filter Retainer
5. Non Return Valve (Pipeline)
6. O-Ring

Figure 5-30 Replacing the pipeline non return valve

E. Replacing the Pressure Relief Valve

A filter has been added to prevent relief valve contamination. The filter and the pressure relief valve can be replaced separately. The pressure relief valve has no serviceable parts. Refer to Section 6, Illustrated Parts, for the Stock Number.

1. Disconnect all pipeline hoses from the wall and the Excel, close all gas cylinders, unplug the power cord and set the system master switch to "OFF."

2. Remove the gas supply module (Section A).

3. Unscrew the pressure relief valve.

⚠ **CAUTION: Apply Teflon tape as follows: wrap it clockwise (looking at the thread end); hold enough tension on the tape so that it lays into the threads; do not use too much tape (1-1/3 layer is adequate); do not wrap the first thread.**

4. Remove any trace of Teflon tape from the gas supply block threads. Wrap the new pressure relief valve threads with Teflon tape and screw the assembly into the gas outlet block.

5. Install the gas supply module. Then, complete Sections:

   3.1, Excel Tests
   3.2, System Check-Out

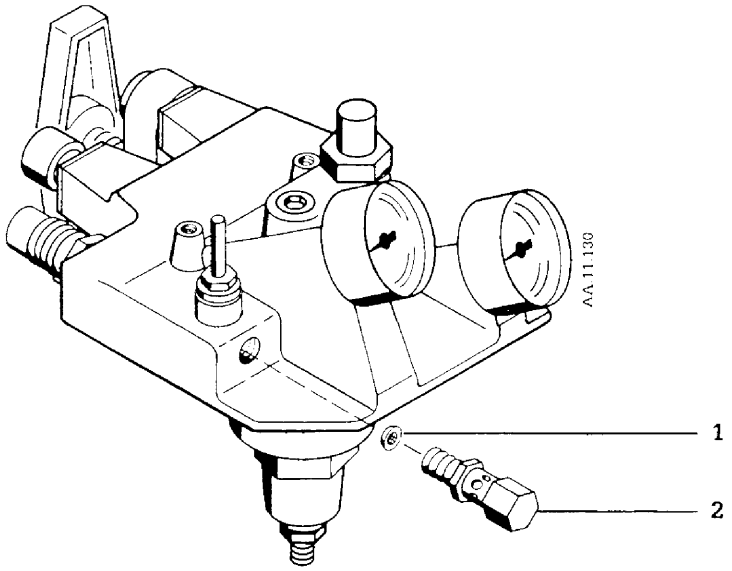

1. Filter
2. Pressure Relief Valve

Figure 5-31 Replacing the pressure relief valve

5.13 Servicing the Vaporizer Manifold

The following vaporizer manifold components can be replaced separately. Refer to Section 6, Illustrated Parts, for the Stock Numbers:

Vaporizer manifold (Section A)
Port valve and or external port valve o-rings (Section B)
Machining port plug and or o-ring (Section C)
Interlock slide mechanism (Section D)
Locking spring (Section E)

A. Manifold Replacement

1. Disconnect all pipeline hoses from the wall and the Excel, close all gas cylinders, unplug the power cord and set the system master switch to "OFF."

2. Lift the vaporizers off of the manifold and remove the manifold front panel. To release the captive fasteners that attach the panel, insert a small screwdriver behind the panel and twist.

3. Support the manifold and remove the mounting screws that attach it to the cross frame.

4. Tilt the manifold to access the nuts that attach the inlet and outlet tubes. Disconnect the tubes with an 11 mm open ended wrench.

5. Reverse these steps to install the manifold. To install the front panel, align the captive fasteners with the mounting holes and press.

6. Complete Sections:

   3.1, Excel Tests
   3.2, System Check-Out

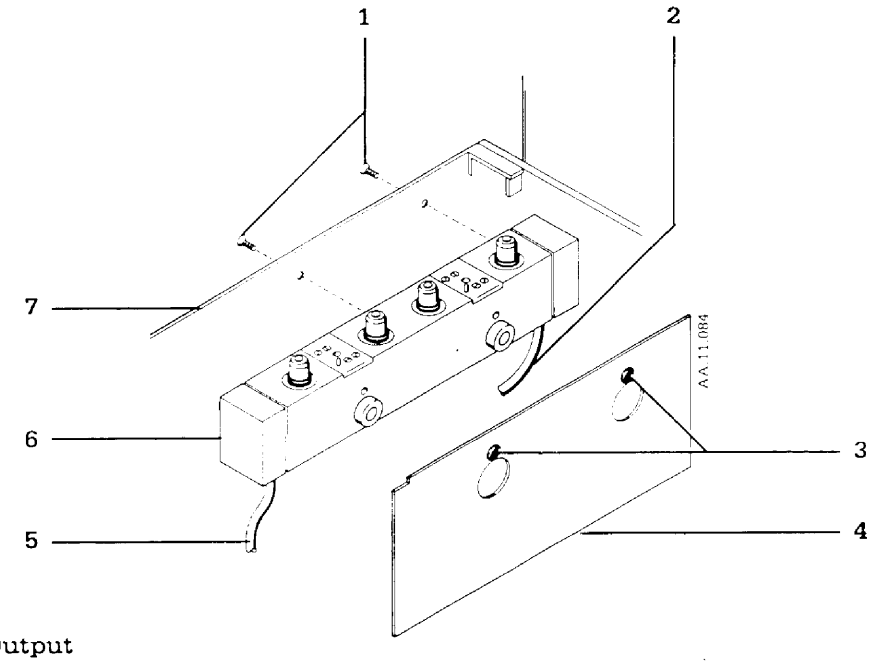

1. Screws
2. Mixed Gas Output
3. Captive Fasteners
4. Front Panel
5. Mixed Gas Input
6. Manifold
7. Rear Cross Frame

Figure 5-32 Replacing the vaporizer manifold

B. Vaporizer Port Valves

The vaporizer port valve has no serviceable parts except the external o-rings. Refer to Section 6, Illustrated Parts, for the Stock Number.

1. Disconnect all pipeline hoses from the wall and the Excel, close all gas cylinders, unplug the power cord and set the system master switch to "OFF."

2. Lift the vaporizers off of the manifold and remove the manifold front panel. To release the captive fasteners that attach the panel, insert a small screwdriver behind the panel and twist.

3. Use a 3 mm hex wrench to remove the mounting screw that attaches the port valve cartridge. The screw is located in a recessed hole in the bottom of the manifold, under the port.

⚠ **CAUTION: The 2 mm hex key used to push out the port must be held straight to avoid damaging the threads in the screw hole.**

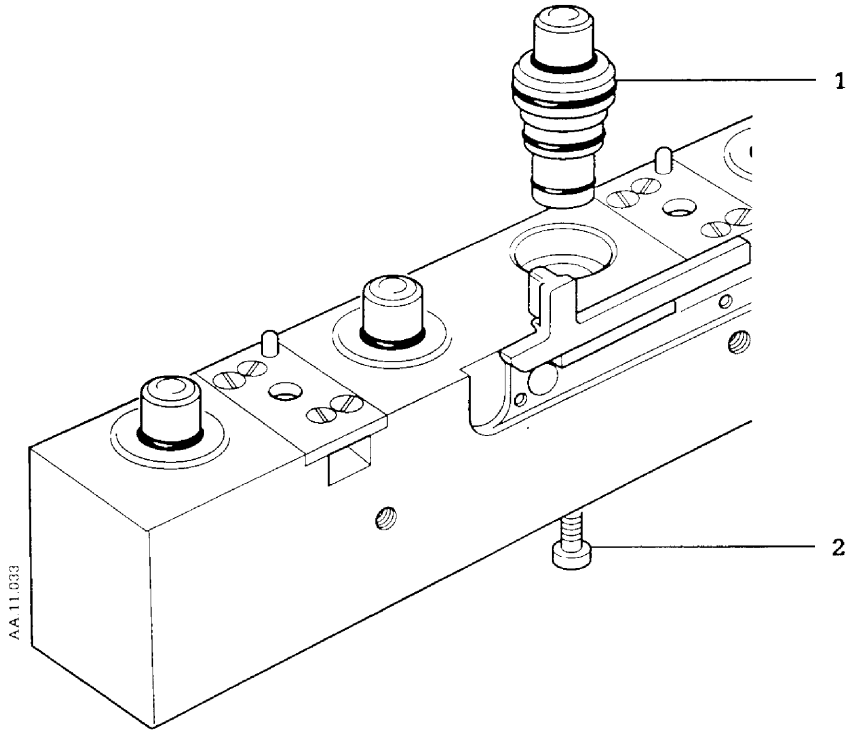

1. Port Valve Cartridge
2. Screw

Figure 5-33 Replacing a vaporizer port valve cartridge

4. Carefully push the port valve cartridge up, through the top of the manifold. If necessary, insert a 2 mm hex wrench through the mounting screw hole to push out the port valve cartridge.

5. Lightly coat the o-rings on the replacement port valve cartridge with Krytox (approved O_2 service lubricant), remove the mounting screw, and insert the cartridge from the top of the manifold.

6. Install the mounting screw.

7. Install the front panel. Align the captive fasteners with the mounting holes and press.

8. Lightly coat the external o-ring with Krytox (approved O_2 service lubricant) and slip it over the port valve cartridge.

9. Complete Sections:

   3.1, Excel Tests
   3.2, System Check-Out

C. Machining Port O-Ring (Three Vaporizer Manifolds Only)

1. Disconnect all pipeline hoses from the wall and the Excel, close all gas cylinders, unplug the power cord and set the system master switch to "OFF."

2. Lift the vaporizers off of the manifold and remove the manifold front panel. To release the captive fasteners that attach the panel, insert a small screwdriver behind the panel and twist.

3. Remove the plug. Use a needle nosed pliers or the special service tool.

4. Lightly coat the new ring with Krytox (approved O_2 service lubricant) and install it on the plug. Then install the plug, the manifold front panel and the vaporizers.

5. Complete Sections:

   3.1, Excel Tests
   3.2, System Check-Out

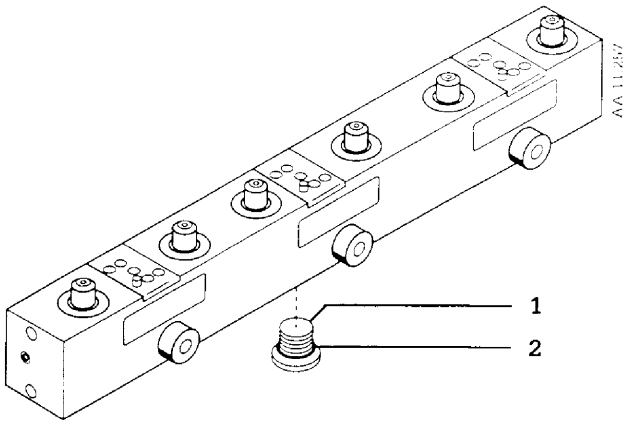

1. Plug
2. O-Ring

Figure 5-34 Replacing the machine port o-ring

D. Servicing the Interlock Mechanism (Three Vaporizer Manifolds Only)

1. Disconnect all pipeline hoses from the wall and the Excel, close all gas cylinders, unplug the power cord and set the system master switch to "OFF."

2. Release the captive fasteners that attach the front panel of the manifold. Insert a small screwdriver behind the panel and twist until the fasteners release.

3. Support the manifold and remove the mounting screws that attach it to the cross frame.

4. Tilt the manifold to access the nuts that attach the inlet and outlet tubes. Disconnect the tubes with an 11 mm open ended wrench.

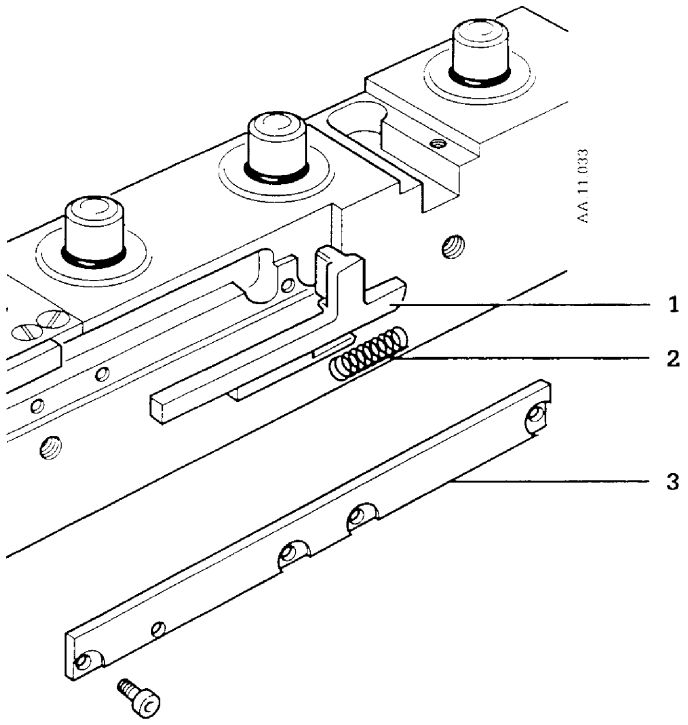

1. Slide
2. Spring
3. Cover Plate

Figure 5-35 Servicing the interlock mechanism

5. Remove the screws and lift off the cover plate.

6. Remove the sides. Remove and discard the old springs.

7. Fit replacement springs on the slides and install the slides.

8. Install the cover plate.

9. Make sure that both slides move freely without any tendency to stick.

10. Steps 1 through 3 to reassemble. To install the front panel, align the captive fasteners with the mounting holes and press.

11. Complete Sections:

    3.1, Excel Tests
    3.2, System Check-Out

E. Replacing a Locking Spring

Note: There are two versions of the locking plate: a shorter plate, used in the middle position on three vaporizer manifolds; and a longer plate used on the outer positions for three vaporizer manifold and all two vaporizer manifold positions. Both plates use the same dzus spring.

1. Disconnect all pipeline hoses from the wall and the Excel, close all gas cylinders, unplug the power cord and set the system master switch to "OFF."

2. Lift the vaporizers off of the manifold.

3. Remove the locking plate.

4. Remove the screws and nuts that attach the locking spring.

5. Install the new locking spring. Reverse steps 4 through 1 to reassemble.

6. Complete Sections:

   3.1, Excel Tests
   3.2, System Check-Out

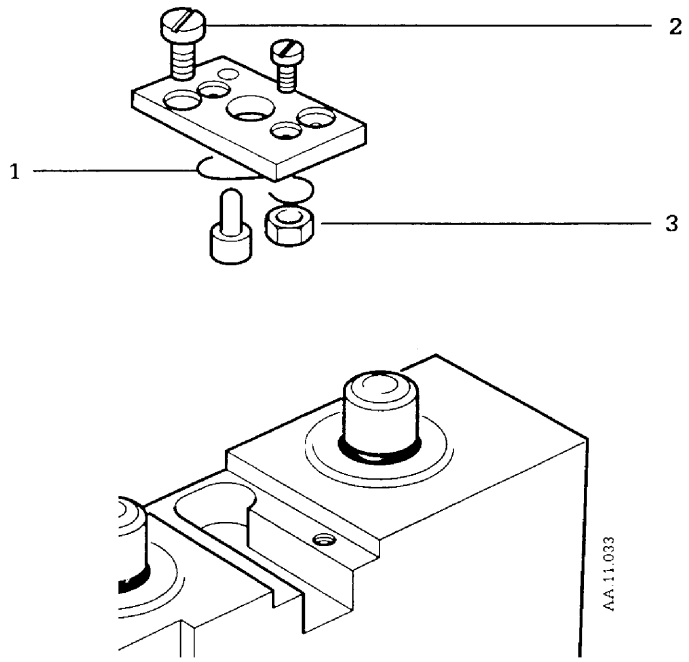

1. Locking Spring
2. Screws
3. Nut

Figure 5-36 Replacing a locking spring

5.14 Replacing or Adjusting Casters

⚠WARNING: Caster replacement requires at least two people to maneuver and tip the Excel. A single person attempting this procedure could injure themselves and damage the Excel.

A. Front Casters (Braked)

1. Disconnect all pipeline hoses from the wall and the Excel, close all gas cylinders, unplug the power cord and set the system master switch to "OFF."

⚠ **WARNING: Do not tilt the Excel without first removing the vaporizers. If a vaporizer is inverted, it must be set to 5% and purged for 30 minutes with a 5 L/min flow. Because of the interlock system, only one vaporizer can be purged at a time.**

2. Remove the absorber, the vaporizers, gas cylinders, drawers, and all auxiliary equipment (e.g. arm mounted ventilators, RGM, etc.).

⚠ **WARNING: The Excel is tilt tested to 10°. Do not tilt the Excel by more than 10°.**

3. Block the rear wheels. Alternately tip the Excel and slide blocks under the caster rails. Raise both sides evenly until there is enough clearance to remove the front casters.

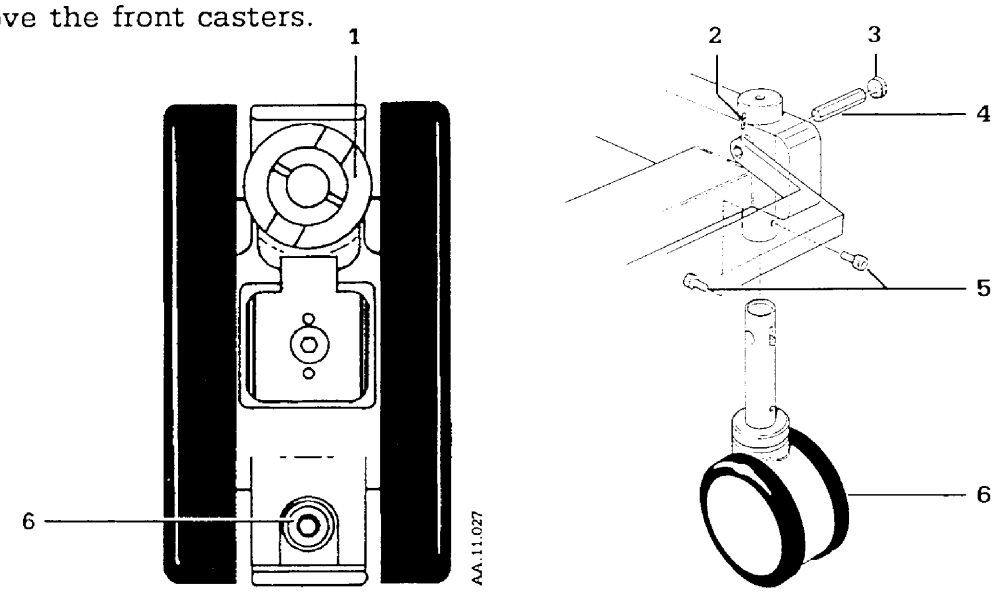

1. Column
2. Roll Pin
3. Plug
4. Hex Bar
5. Screws
6. Brake Adjustment

Figure 5-37 Replacing a front caster

4. Use a 3/32 pin punch to remove the roll pin, remove the plug and force out the hex bar.

5. Remove the two mounting screws and pull out the caster.

6. Slide the new caster into position with the brake adjustment screw pointing to the front and install the mounting screws.

7. Reattach the brake gear. Slide the hex pin into position. Then, install the roll pin and the plug.

8. Try to turn the caster with the brake off. If there is a ratchet sound or the caster will not turn, loosen the brake adjustment screw.

9. Set the brake and try to turn the caster. If the caster turns, tighten the brake adjustment screw.

10. Repeat steps 8 and 9 until no further adjustments are required.

    Note: To also replace the rear casters, skip step 11 and continue with Section 5.14B.

11. Alternately tip the Excel and remove the support blocks. Then, remount the cylinders and the auxiliary equipment.

12. Complete Sections:

    3.1, Excel Tests
    3.2, System Check-Out

B. Rear Casters (Not Braked)

1. Disconnect all pipeline hoses from the wall and the Excel, close all gas cylinders, unplug the power cord and set the system master switch to "OFF."

⚠ **WARNING: Do not tilt the Excel without first removing the vaporizers. If a vaporizer is inverted, it must be set to 5% and purged for 30 minutes with a 5 L/min flow. Because of the interlock system, only one vaporizer can be purged at a time.**

2. Remove the absorber, the vaporizers, gas cylinders, drawers, and all auxiliary equipment (e.g. arm mounted ventilators).

⚠ **WARNING: The Excel is tilt tested to 10°. Do not tilt the Excel by more than 10°.**

3. Block the front wheels. Alternately tip the Excel and slide blocks under the caster rails. Raise both sides evenly until there is enough clearance to remove the rear casters.

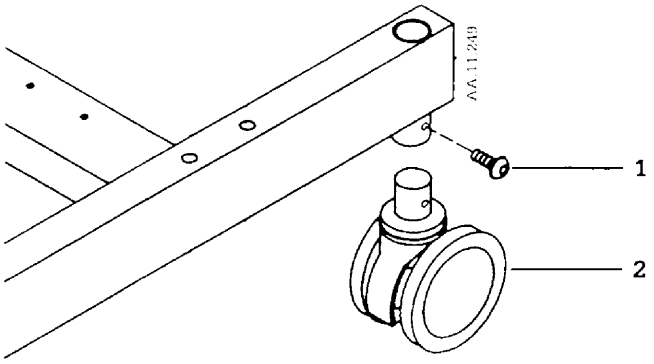

1. Screws
2. Rear Caster

Figure 5-38 Replacing a rear caster

4. Remove the two caster mounting screws and pull out the caster.

5. Insert a new caster and install the mounting screws.

6. Alternately tip the Excel and remove the support blocks. Then, remount the cylinders and the auxiliary equipment.

7. Complete Sections:

   3.1, Excel Tests
   3.2, System Check-Out

5.15 Replacing Drawers

To replace a drawer, order two slides, one drawer, six nuts and six KEP washers. Refer to Section 6, Illustrated Parts, for stock numbers.

1. Disconnect all pipeline hoses from the wall and the Excel, close all gas cylinders, unplug the power cord and set the system master switch to "OFF."

2. To remove a drawer:

   a. Slide the drawer out as far as possible.

   b. Push down on the release lever and pull the drawer out of the cabinet.

3. Assemble the replacement drawer:

   a. Separate the drawer and the cabinet halves of the slide. Pull the drawer member out as far as possible. Then, push down on the release lever and remove the drawer member.

   b. Bolt the drawer member to the side of the drawer. Orient the bolts so that the nuts are inside the drawer.

   c. Repeat a and b for the other slide.

4. To install a drawer:

   a. Pull the intermediate portion of the drawer member forward into the open position.

   b. Move the ball retainer to the front of the cabinet member.

   c. Fit the drawer member into the ball retainer and close the drawer.

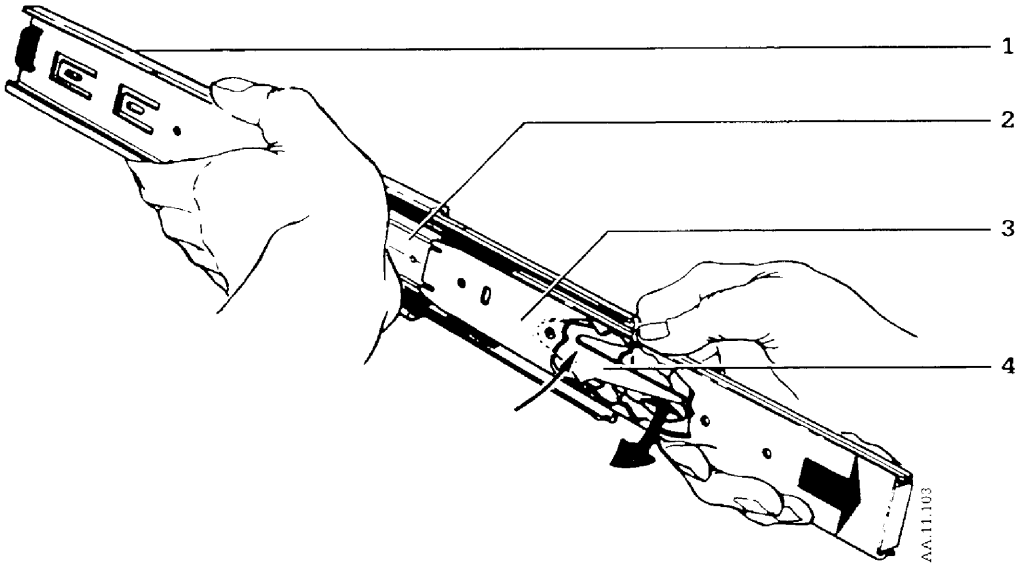

1. Cabinet Member
2. Intermediate Position
3. Drawer Member
4. Release Lever

Figure 5-39 Replacing a drawer

5.16 Replacing Fuses and Resetting Circuit Breakers

⚠WARNING: Unplug the Excel electrical power cord from the power outlet and set the system master switch to "OFF" before checking the fuses.

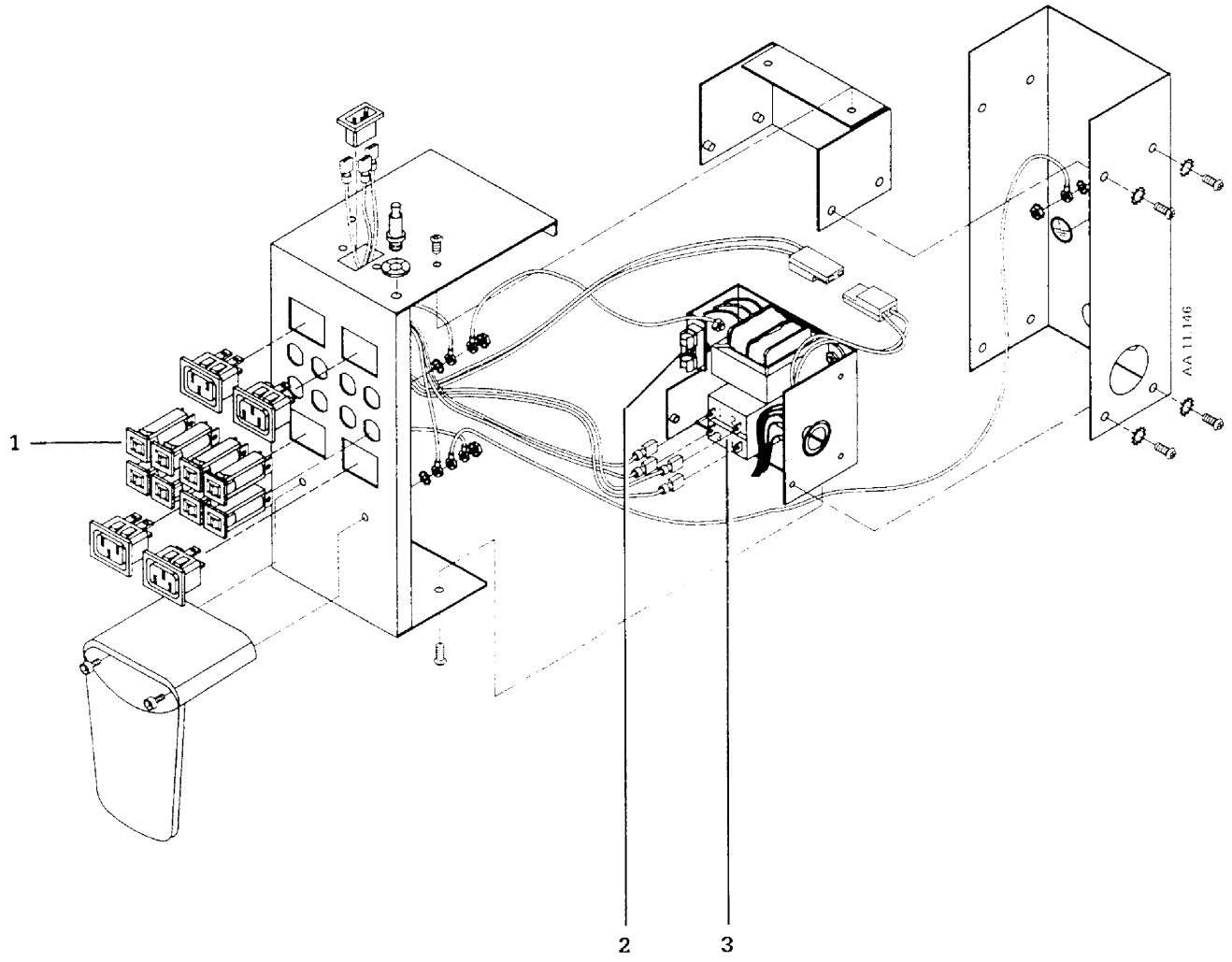

1. Circuit Breakers 2 A, 250 V (Auxiliary Outlets)
2. Fuse 2 A, 250 V, Fast Acting (Light Package Fuse)
3. Circuit Breaker 10 A, 250 V (Mains Input)

Figure 5-40 Fuse and circuit breaker locations in the outlet box

6/Illustrated Parts

6.1 Power Outlet Box

Figure 6-1 IEC, French, and German (TUV) power outlet boxes.....6-4
Figure 6-2 IEC and French power outlet box components.....6-6
Figure 6-3 German (TUV) power outlet box.....6-8

6.2 Pneumatic Components

Figure 6-4 Pneumatic components.....6-10
Figure 6-5 Gas supply assembly.....6-12
Figure 6-6 DIN 477 Part 1 cylinder connections (Austrian Air, N_2O and O_2 supplies and German reserve O_2/Air gas supply)..... 6-14
Figure 6-7 Pipeline fittings -- national variations.....6-16
Figure 6-8 Pneumatic components 2.....6-18
Figure 6-9 Low O_2 pressure alarm.....6-21
Figure 6-10 Left fixed common gas outlet assembly.....6-22
Figure 6-11 Swivel common gas outlet assembly.....6-24
Figure 6-12 Tapered ISO common gas outlet.....6-26
Figure 6-13 Dual port common gas outlet (France).....6-28
Figure 6-14 What the fittings look like.....6-30
Figure 6-15 Flowmeter modules, only four gas shown.....6-32
Figure 6-16 Flowmeter modules, only four gas shown.....6-34
Figure 6-17 Secondary regulator.....6-36
Figure 6-18 Needle Valve assembly O_2.....6-38
Figure 6-19 Needle Valve assembly nitrous oxide.....6-40
Figure 6-20 Needle Valve assembly air/CO_2.....6-42
Figure 6-21 Flowtube service kits.....6-44

6.3 Chassis Components

Figure 6-22 Front view.....6-46
Figure 6-23 Vanity panel (France, Australia, Scandinavia, Germany and Switzerland only).....6-48
Figure 6-24 Front panels.....6-50
Figure 6-25 Tray top.....6-52
Figure 6-26 Light packages.....6-53
Figure 6-27 Shelves style 2.....6-54
Figure 6-28 Shelves style 1.....6-55
Figure 6-29 Cabinet assembly 2 small, 1 large drawer.....6-56
Figure 6-30 Standard cabinet w/ two, four inch drawers.....6-58
Figure 6-31 Add on cabinet kit w/ two four inch drawers.....6-60
Figure 6-32 Add on single eight inch drawer cabinet kit.....6-61
Figure 6-33 Weight kits.....6-62
Figure 6-34 7800 patient interface and cabling (except German).....6-63
Figure 6-35 German 7800 patient interface and cabling.....6-64

6.4 Accessories

A. Absorber Mounts.....6-66
B. Bain Circuit Adapter & 6000 Monitor Mounting.....6-70
C. Cable Management Arm.....6-72
D. Dovetail Mounted Tycos BP.....6-74
E. Flowmeter Kit.....6-75
F. Gas Scavenging System.....6-76

G. Regulator & Trap Rail Mount Kit 6-78
H. RGM Mounting Kits 6-79
I. Shelf Kits 6-81
J. Utility Mounting Posts 6-83
K. Vaporizer Storage Bracket 6-87
L. Ventilator Mounting Arms 6-88

6.5 Label Sets

Figure 6-57 Label GND Main 6-92
Figure 6-58 Power outlet box label (IEC English shown) 6-92
Figure 6-59 Label Equipotential 6-93
Figure 6-60 Regulator and needle valve label sets 6-93
Figure 6-61 Typical main label set 6-94
Figure 6-62 Flowtube label sets 6-95
Figure 6-63 Excel/Ventilator interface label 6-95
Figure 6-64 Gas supply ID (French Excel only) 1002-3916-000 6-96
Figure 6-65 Label Blue 21 mm 1001-3712-000 6-96
Figure 6-66 Air/N_2O selector switch and flowmeter shield labels 6-97
Figure 6-67 Gas supply gauge labels 6-98
Figure 6-68 French dual common gas outlet labels 6-99

6.6 Test Fixtures

Figure 6-69 Low O_2 pressure alarm, O_2 and air primary regulator adjustments 6-100
Figure 6-70 Primary regulator adjustments 6-100
Figure 6-71 Low O_2 alarm adjustments for Excels without Mini-Schrader power outlets (Scandinavian) 6-101
Figure 6-72 Secondary regulator adjustments 6-101
Figure 6-73 Low pressure leak test device (neg. press. test) 6-102
Figure 6-74 Low pressure leak test device (pos. press. test) 6-102

6.7 Tools, Touch Up Paint, Sealants, Etc.

Customer Replacement Kit: 2910-0000-000

Description	Qty	Stock Number
Gasket Cylinder (Item 5 Figure 6-5, Item 4 Figure 6-6)	5	0210-5022-300
Vaporizer Port Valve External O-Ring (Item 21.a Figure 6-22)	6	1102-3016-000

Annual Service Kit: 2910-0001-000

Description	Qty	Stock Number
Filter Bronze (Item 8 Figure 6-5 & Item 7 Figure 6-6)	8	9914-6380-000
Retaining Ring Filter (Item 9 Figure 6-5 & Item 8 Figure 6-6)	8	1001-5954-000
O-Ring 13.1mm ID 1.66mm OD (Item 7 Figure 6-5 & Item 6 Figure 6-6)	5	9221-3013-116
Dzus Spring (Included w/ Item 22 Figure 6-22)	3	1102-3056-000
Filter Large Flowtube (Item 4 Figure 6-21)	4	1001-3559-000
Filter Small Flow Tube (Item 6 Figure 6-21)	2	1001-3560-000
O-Ring 16.1 mm Inner Dia x 19.3OD (Item 23 Figure 6-21)	1	9221-3016-116
O-Ring 6.1mmID 1.6mm (Item 4 Figure 6-21)	16	9221-3006-116
O-Ring 12.1mmID1.6mmDI (Item 3 Figure 6-21)	12	9221-3012-116
Screw 6BA Thread x1/4LG ST (Item 2 Figure 6-53)	6	0400-3146-300
Nut 6BA Thread 0.190 Hex (Item 11 Figure 6-53)	6	0402-1962-300
Valve Flapper (Item 3 Figure 6-10 or 1.a Figure 6-11 Common Gas Outlet; Item 24 Figure 6-15 Flowmeter Check Valve)	2	0211-1451-100
Seal Bonded Air Pipeline Inlet M16 (Item 21 Figure 6-5)	1	9224-0616-229
Seal Bonded O2 Pipeline Inlet M18 (Item 21 Figure 6-5)	1	9224-0618-232
Seal Bonded N2O Pipeline Inlet M20 (Item 21 Figure 6-5)	1	9224-0620-233

6.1 Power Outlet Box

Figure 6-1 IEC, French, and German (TUV) power outlet boxes

Note: All items listed on this page are normally supplied with the appropriate power outlet boxes (items 1, 2 and 3) except for the flat style rear flowmeter cover. The flat cover is drilled and fitted with pem nuts to allow vertical power outlet box mounting. Order it only if it is not already installed on the Excel.

Item		Description	Stock Number	See For Part Breakdown
1.		Power Outlet Box w/ Mounting Kit & Power Cord		
		IEC Power Outlet Box w/ IEC style power cord	1001-8966-000	Figure 6-2
		IEC Power Outlet Box w/ BSI style power cord	1001-8965-000	Figure 6-2
		French Power Outlet Box w/ IEC Power Cord	1001-8990-000	Figure 6-2
		German Power Outlet Box (TUV) w/ IEC Power Cord	1001-8806-000	Figure 6-3
2.		Mounting Kit (Included w/ Item 1)	1001-8948-000	
	a.	Screw M4x16 Phillips Pan Head (4)	9211-0440-163	
	b.	Lockwasher External Lock M4 (6)	9213-0540-003	
	c.	Bracket Excel Outlet Box (Only Used w/ French Outlet Box)	1001-5721-000	
	d.	Screw M4x10 Socket Button Head Cap (2)	9211-1040-109	
	e.	Body Standoff (for Excel w/ Full Mid Shelf)	1001-5847-000	
3.		Clamp Cord Connector (Only Supplied w/ French Outlet Box)	1001-5768-000	

Not Shown	Stock Number
Power Cords	
BSI Style Power Cord (BS 1363)	0208-0962-300
IEC Style Power Cord	1010-3120-000
Auxiliary Outlet Power Cord	
For German Outlet Box	1001-3886-000
For French & IEC Outlet Boxes)	0208-0519-300
Mounting Instructions	
IEC & German Power Outlet Boxes	1001-0807-000
French Power Outlet Box	1001-0851-000
Flowmeter Rear Cover	
Excel 410 (flat)	1004-4097-000
Excel 210 (flat)	1002-5924-000
Excel 110 (flat)	1005-5915-000

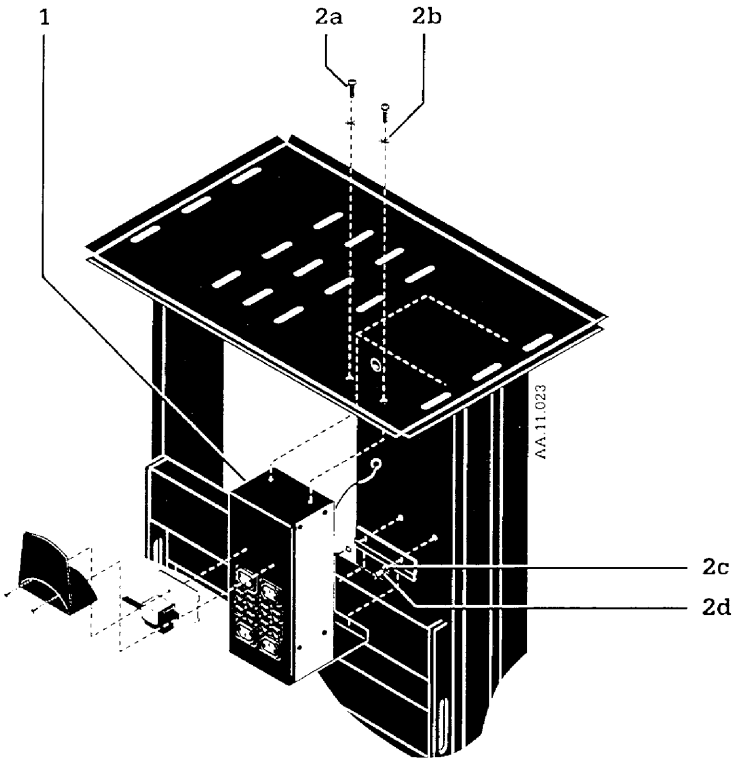

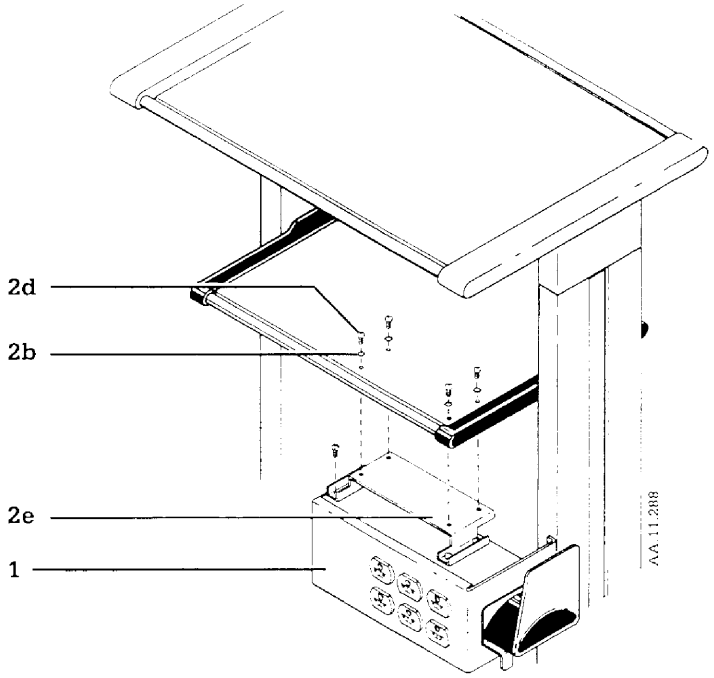

Figure 6-1 IEC, French, and German (TUV) power outlet boxes

⚠**CAUTION: Do not replace the transformer assembly without first verifying that the voltage selector switch is set to the correct voltage.**

Figure 6-2 IEC and French power outlet box components

Item	Description	Stock Number	
1.	Screw M4x6 PAN PH (2)	9211-0440-067	a
2.	Guard Anti Disconnect	0234-1004-510	
3.	Frame Outlet Box IEC (Bare Frame Only)	1001-5848-000	
4.	Power Cord		
	BSI Style Power Cord (BS 1363)	0208-0962-300	
	IEC Style Power Cord	1010-3120-000	
5.	Label Power Outlet Box		
	English	1001-3873-000	
	French	1001-3739-000	
6.	Stud Equipotential & Mounting Hardware	0208-0070-300	
7.	Connector Two Position	1001-3886-000	b
8.	Bracket Left Hand Outlet Box	1001-5846-000	
9.	Cover Outlet Box	1001-5844-000	
10.	Washer External Lock M4 (15)	9213-0540-003	a
11.	Screw, M4x8 Pn. Hd. Ph (8)	9211-0440-083	
12.	Label GND Main (3)	1010-3044-000	
13.	Transformer Assembly, Service Kit	2900-0013-000	
14.	Circuit Breaker 10.0 Amp	1001-3879-000	
15.	Fuse 2A 5x20 mm 250V	1202-3154-000	
16.	Nut KEPS M4 PL ST (9)	0144-3717-314	
17.	Bracket, Cord Black	0212-3501-100	
18.	Screw M4x10 Button Head Socket (2)	9211-1040-109	
19.	Circuit Breaker 2A 250VAC (8)	1010-3065-000	
20.	Receptacle Female 3 Prong (4)	1010-3064-000	
21.	Connector Male 3 Prong	1010-3063-000	

a Additional washers and screw used to ground outlet box.

b Wires not included; connector can be inverted to serve as a plug or socket. Refer to Section 7, Schematics for wiring diagram

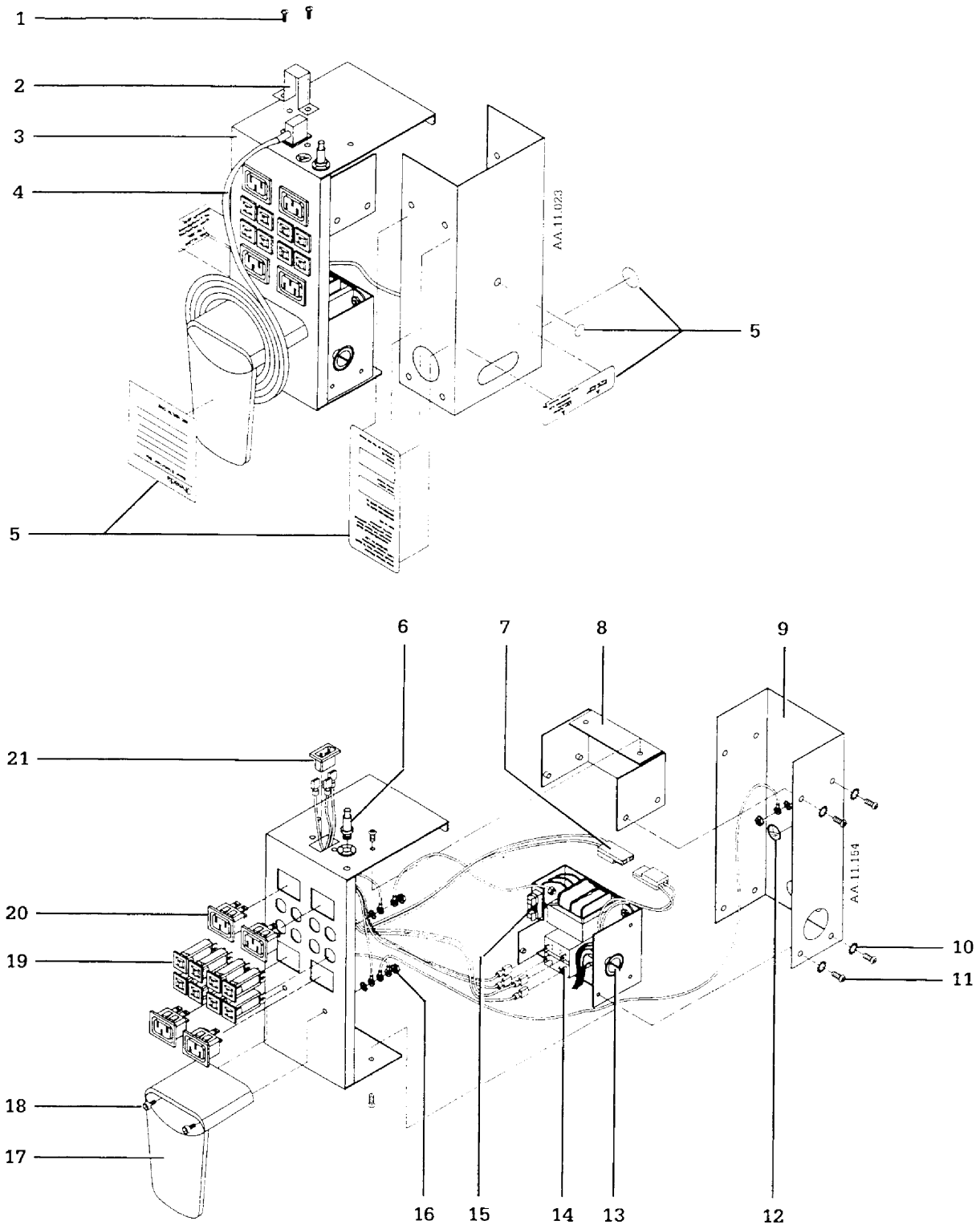

Figure 6-2 IEC and French power outlet box components

⚠ **CAUTION: Do not replace the transformer assembly without first verifying that the voltage selector switch is set to the correct voltage.**

Figure 6-3 German (TUV) power outlet box components

Item	Description	Stock Number	
1.	Connector Male 3 Prong	1010-3063-000	
2.	Cable Tie 10.16 cm (10)	0203-5915-300	
3.	Bracket Left Hand German	1001-5794-000	
4.	Double Sided Tape (Specify Length)	0220-5102-300	
5.	Insulated Paper (Specify Length)	1001-3600-000	
6.	Cover Outlet Box	1001-5844-000	
7.	Washer Ext Lck M4 (15)Box (1)Transformer	9213-0540-003	a
8.	Screw, M4x8 Pn. Hd. Ph (8)	9211-0440-083	
9.	Label GND Main (4)Box (3) Transformer	1010-3044-000	
10.	Connector Two Position	1001-3886-000	b
11.	Transformer Assy German Outlet Box (TUV)	1001-8807-000	c
12.	Nut KEPS M4 (4) Box (2) Transformer	0144-3717-314	
13.	Screw M4x8 PAN PH (4)	9211-0440-067	a
14.	Screw M4x10 Button Head Socket (2)	9211-1040-109	
15.	Bracket, Cord Black	0212-3501-100	
16.	Circuit Breaker 2A 250VAC (8)	1010-3065-000	
17.	Receptacle CEE 7/7 Panel Mounting (4)	1202-3551-000	
18.	Frame Outlet Box German	1001-5796-000	
19.	Stud Equipotential (w/ Mtg Hardware)	0208-0070-300	
20.	Fuse 2A 5x20 mm 250 V, Fast Acting	1202-3154-000	
21.	Nut, Circuit Breaker Mounting	1001-5893-000	
22.	Bracket Right	1001-5795-000	
23.	Washer External Lock	0144-1118-225	
24.	Connector Light Package (w/ Mtg Hardware)	1001-3882-000	
25.	Voltage Selector Switch	1500-3188-000	
26.	Nuts (2)	0144-3717-302	
27.	Circuit Breaker 10.0 Amp	1001-3879-000	
28.	Fuse Holder Panel Mount	1001-3798-000	

Not Shown	Stock Number
Label Set Outlet Box German	1001-3797-000
Guard Anti Disconnect	0234-1004-510

a Additional washers and screw not shown here are used to ground outlet box.

b Wires not included; connector can be inverted to serve as a plug or socket. Refer to Section 5, Schematics for wiring diagram.

c Transformer is wired and all components shown in detail are assembled. Transformer assembly includes all items shown in the detail.

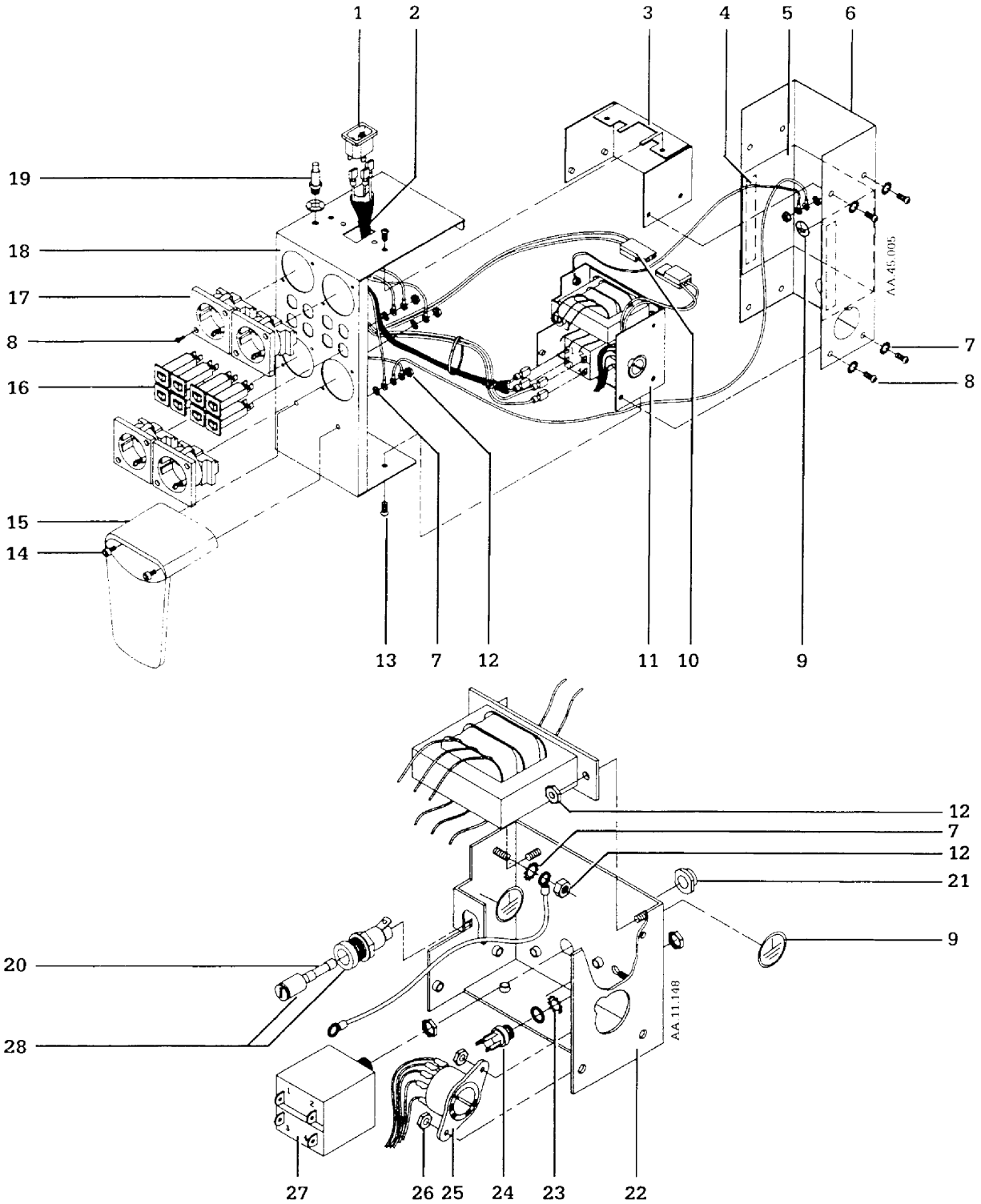

Figure 6-3 German (TUV) power outlet box components

6.2 Pneumatic Components

Figure 6-4 Pneumatic components

Item	Description	Stock Number		
1.	Label Equipotential	1001-3737-000		
2.	Stud Equipotential w/ Nut	0208-0070-300		
3.	Spacer Jackpost Hex w/ Hardware	0402-0250-300		
4.	25CKT DSUB Connector Dust Cover	1001-3862-000		
5.	Cover Gas Block			
	Model 410	1004-5905-000		
	Model 210	1002-5913-000		
	Model 110	1005-5911-000		
6.	Screw M4x6 Button Head SST	9211-1040-067		
7.	Chain Bead Coupling TY A	1001-3735-000		
8.	Label excel/vent/monitor pod	1001-3819-000		
9.	Cylinder Wrench and Cable	0219-3415-800		
10.	Label Ground Mains (2)	1010-3044-000		
11.	Washer External Lock M4 (2)	9213-0540-003		
12.	Nut M4x0.7 Thick	9212-0140-003		
13.	Gauge Shroud (1/Gauge)	1001-4099-000		
14.	Bracket Shutoff Valve Mount	1001-5905-000		
15.	Washer EXT LCK M4 (4)	9213-0540-003		
16.	Nut M4 x 0.7 Thick (4)	9212-0140-003		
17.	Standoff M/F 16 mm LG M4 (2)	1001-3842-000		
18.	Cable Tie Mount (2)	1001-3736-000		
19.	Tie Cable 4 inches (2)	0203-5915-300		
20.	Screw, M3 x 0.5 5 mm LG (2)	9211-0430-053		
21.	15CKT DSUB Connector Cover	1001-3861-000		
22.	15CKTDSUB Concert Mount Plate	1001-5840-000		
23.	Nut Keps M4 PL ST EXT LCK (3)	0144-3717-314		
24.	Harness Internal Sub Assembly	1001-7930-000		
25.	Nut KEP M3 PL ST EXT LCK	0144-3717-302		
26.	Valve Shutoff , N2O Service	2910-0067-000		
27.	Valve Shutoff Third Gas w/ fittings			
	Valve Shutoff, Air Service	2910-0068-000		
	Valve Shutoff, CO2, Service	2910-0069-000		
28.	Screw M6x16 Countersunk(3/gas)	9211-0960-167		
	Screw M6x12 Button Head (3/gas)	9211-1060-127		
29.	Gas Supply Modules			**Parts Breakdown**
	O2 Cyl Pipeline (Pipeline/Cyl Pressure)			
	Australia (345/311-345 kPa)	1001-8917-000	a, b	Figure 6-5 and 6-7
	Austria (414/380-414 kPa)	1001-8922-000	a, b	Figure 6-6 and 6-7
	France (345/311-345 kPa)	1001-8989-000	a, b	Figure 6-5 and 6-7
	Germany (500/380 -414 kPa)	1001-8808-000	a, b	Figure 6-5 and 6-7
	ISO (414/380-414 kPa)	2910-0050-000		Figure 6-5
	Scandinavia (414/380-414 kPa)	1001-7944-000	a, b	Figure 6-5 and 6-7
	Switzerland (414/380-414 kPa)	1001-7017-000	a, b	Figure 6-5 and 6-7
	O2 Pipeline Only (Pipeline Pressure)			
	ISO, Spain, Italy (414 kPa)	1001-7011-000	b	Figure 6-5
	O2 Cylinder Only (Cyl Pressure)			
	ISO (380-414 kPa)	2910-0053-000		Figure 6-5
	N2O Cyl Pipeline (Pipeline/Cyl Pres.)			
	Australia (345/311-345 kPa)	1001-8918-000	a, b	Figure 6-5 and 6-7
	Austria (414/380-414 kPa)	1001-8923-000	a, b	Figure 6-6 and 6-7
	Germany (500/380 -414 kPa)	1001-8809-000	a, b	Figure 6-5 and 6-7
	Scandinavia (414/380-414 kPa)	1001-7945-000	a, b	Figure 6-5 and 6-7
	Switzerland (414/380-414 kPa)	1001-7018-000	a, b	Figure 6-5 and 6-7
	ISO (414/380-414 kPa)	2910-0051-000		Figure 6-5

a National fittings are used. See Figure 6-8 for pipeline fittings and Figure 6-9 for cylinder fittings.

b Does not include pillars and set screws used to mount gas block . Order three of each separately.

Item	Description	Stock Number		Parts Breakdown
29.	Gas Supply Modules (Continued)			
	N2O Pipeline Only (Pipeline Pressure)			
	ISO, Spain, Italy (414 kPa)	1001-7012-000	b	Figure 6-5
	France (345 kPa)	1001-7970-000	a, b	Figure 6-5 and 6-7
	N2O Cylinder Only (Cyl Pressure)			
	ISO (380-414 kPa)	1001-7031-000	b	Figure 6-5
	Air Cyl Pipeline (Pipeline/Cyl Pres.)			
	Australia (345/311-345 kPa)	1001-8919-000	a, b	Figure 6-5 and 6-7
	Austria (414/380-414 kPa)	1001-8924-000	a, b	Figure 6-6 and 6-7
	ISO (414/380-414 kPa)	2910-0052-000		Figure 6-5
	Scandinavia (414/380-414 kPa)	1001-7946-000	a, b	Figure 6-5 and 6-7
	Switzerland (414/380-414 kPa)	1001-7018-000	a, b	Figure 6-5 and 6-7
	Air Pipeline Only (Pipeline Pressure)			
	ISO, Spain, Italy (414 kPa)	1001-7013-000	b	Figure 6-5
	France (345 kPa)	1001-7971-000	a, b	Figure 6-5 and 6-7
	Air Pipeline/O2 Cyl (Pipeline/Cyl Pressure)			
	Germany (500/311-345 kPa)	1001-8810-000	a, b	Figure 6-6and 6-7
	CO2 Cylinder Only (Cyl Pressure)			
	ISO (210 kPa)	2910-0055-000		Figure 6-5
30.	Pillar (3)	1001-4087-000		
	Not Shown	**Stock Number**		
	Set Screw m6x20 SKT HD Cup (3)	9211-0860-205		

a National fittings are used. See Figure 6-8 for pipeline fittings and Figure 6-9 for cylinder fittings.

b Does not include pillars and set screws used to mount gas block . Order three of each separately.

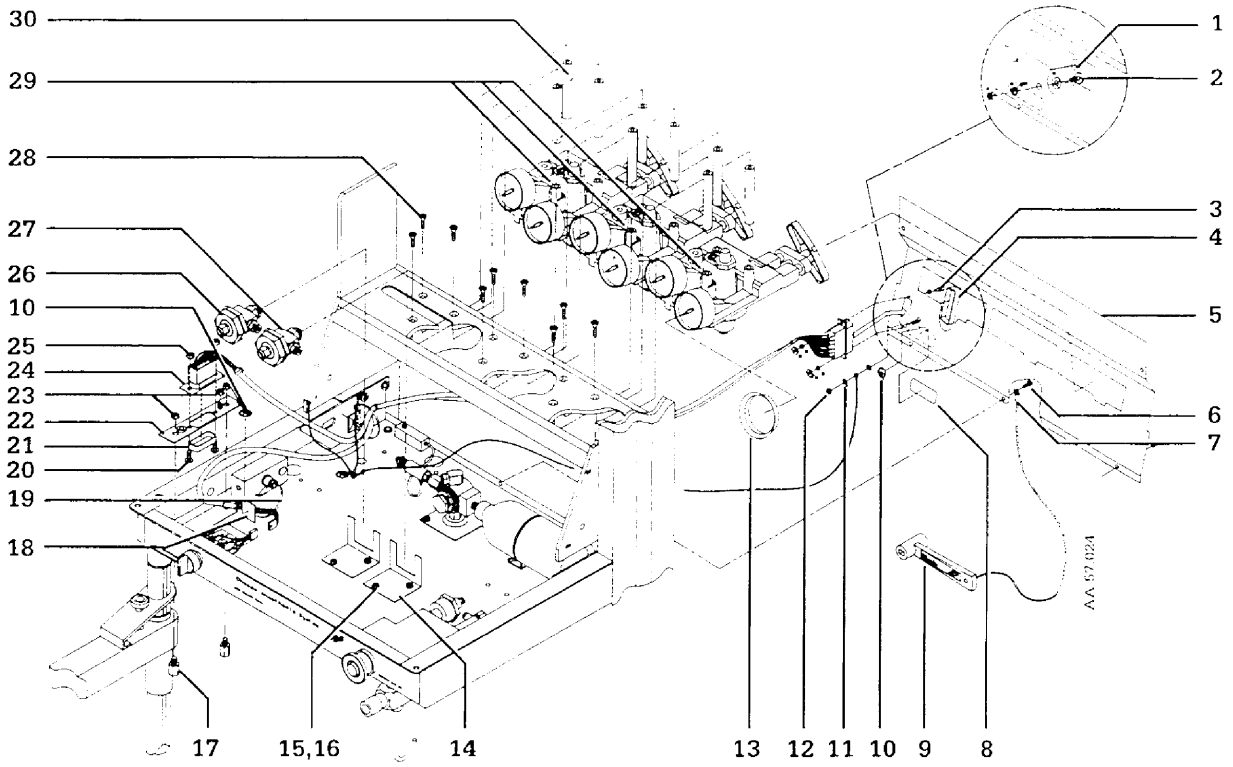

Figure 6-4 Pneumatic components

Figure 6-5 Gas supply assembly (cylinder and pipeline style)

Item	Description	Stock Number	
1.	Tee Handle w/ Insert	0219-3372-600	a
2.	Screw M8x25 Cap Head Socket (2)	9211-0680-253	a
3.	Spacer Gas Block 16 mm (2)	1001-4077-000	a
4.	Yoke Clamp	1001-4076-000	a
5.	Gasket Cylinder	0210-5022-300	
6.	Adapter Yoke Inlet	1001-4075-000	b
7.	O-Ring 13.1mm ID 1.66mm OD	9221-3013-116	c
8.	Filter Bronze (2)	9914-6380-000	
9.	Retaining Ring Filter (2)	1001-5954-000	d
10.	Plug 3/8 NPT	1001-4903-000	e
11.	Regulator Check Valve (complete)	1001-8028-000	f
12.	O-ring 9.1 mm ID 1.6 mm DI (2)	9221-3009-116	
13.	Plug, 1/8NPTM w/Hex Socket (2)	1001-4902-000	e
14.	Pipeline Gauges (all gases)	1001-3500-000	e
15.	Cylinder Gauges		e
	Air and Oxygen	1001-3501-000	
	N2O and CO2	1001-3502-000	
16.	Valve Relief (690 kPa)	1001-7008-000	e
17.	Filter	0214-7107-325	
18.	Fitting Standoff Tubing		b
	Fitting for 6mm Tubing O2	1001-3521-000	
	Fitting for 5mm Tubing N2O	1001-3520-000	
	Fitting for 4mm Tubing CO2	1001-3519-000	
19.	Air Version of Item 18 (both a & b)		b
a.	Connector Straight Tubing 8mm Air	1001-3528-000	e
b.	Fitting Straight Tubing 8 mm Air	1001-3508-000	e
20.	Pipeline Check Valve (complete)	1001-8027-000	f
21.	Seal Bonded (1 or 2)		c
	Seal Bonded Air M16	9224-0616-229	g
	Seal Bonded O2 M18	9224-0618-232	g
	Seal Bonded N2O M20	9224-0620-233	g
22.	Filter Body (DIN Germany)		a h
	Filter Body O2	1202-5196-000	
	Filter Body N2O	1202-5197-000	
	Filter Body Air	1202-5198-000	
	Filter Bodies NIST (Austria, ISO, Italy, Spain)		
	Filter Body O2 NIST	1001-5967-000	
	Filter Body O2 NIST w/ Filter & Retainer	1001-8914-000	
	Filter Body N2O NIST	1001-5968-000	
	Filter Body N2O NIST w/ Filter & Retainer	1001-8915-000	
	Filter Body Air NIST	1001-5826-000	
	Filter Body Air NIST w/ Filter & Retainer	1001-8929-000	
	Filter Body (DISS M Swiss)		
	Filter Body O2	9913-6489-400	
	Filter Body N2O	9913-6489-500	
	Filter Body Air	9913-6557-800	
23.	Plug Pipeline Only Gas Supply		i
	Plug Pipeline Block O2	1001-4331-000	
	Plug Pipeline Block N2O	1001-4332-000	
	Plug Pipeline Block Air	1001-4333-000	

a See Figure 6-7 other pipeline fittings. See figure 6-6 for DIN cylinder fittings.

b Torque to 7.3 N-m (5.4 lb-ft)

c Apply Krytox (Stock No 1001-3854-000) or an approved oxygen service lubricant

d Press in

e Apply Teflon Tape to threads (Stock No 220-5060-300)

f New style check valves directly replace older style.

g Pipeline only gas supplies require two bonded seals. The second goes around the plug (item 23).

h Torque to: O2 and air 40.7 ± 2.0 N-m (30±1.5 lb-ft); 54.2 ± 2.7 N-m (N2O 40±2 lb-ft)

i Torque to 34 N-m (30 lb-ft)

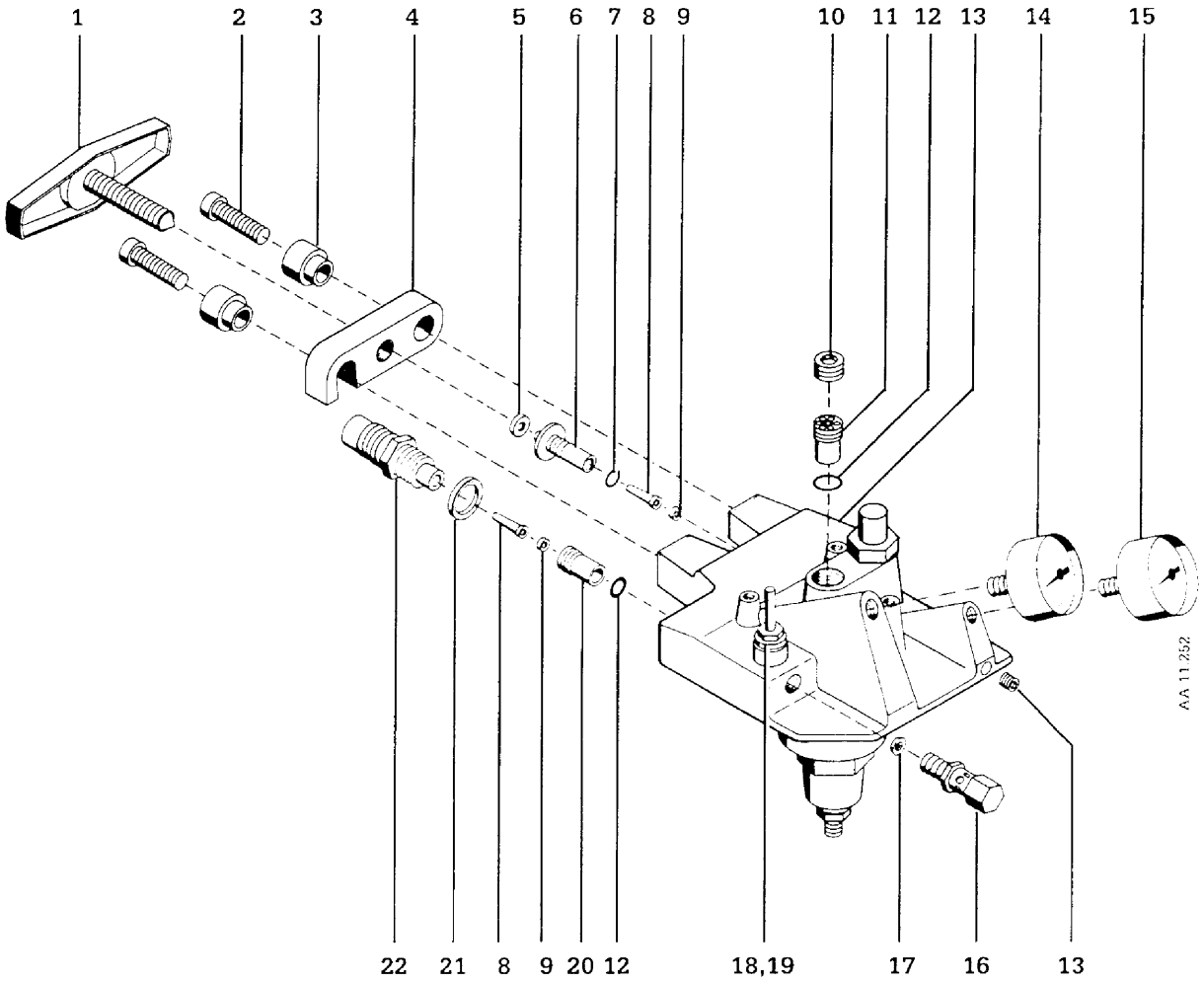

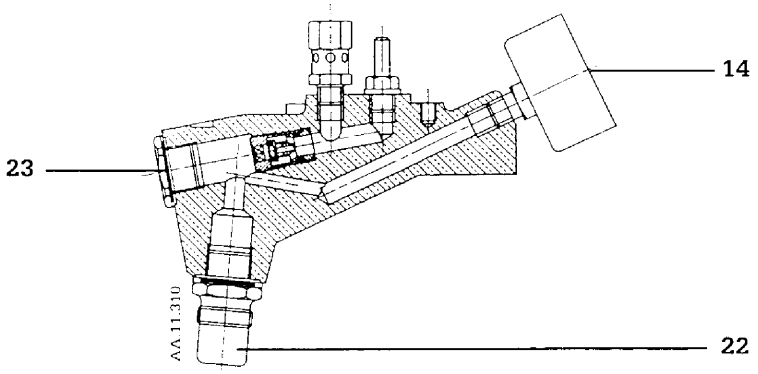

Figure 6-5 Gas supply assembly (cylinder and pipeline style)

Figure 6-6 DIN 477 Part 1 cylinder connections (Austrian Air, N_2O and O_2 supplies and German reserve O_2/Air gas supply)

Item	Description	Stock Number	
1.	Screw M8x25 Cap Head Socket (2)	9211-0680-253	
2.	Ring Sealing (O2, N2O, and Air)	1001-3812-000	
3.	Cylinder Connection		
	Cylinder Adapter O2	1001-7976-000	
	Cylinder Adapter N2O	1001-7977-000	
	Cylinder Adapter Air	1001-7978-000	
4.	Gasket Cylinder	0210-5022-300	
5.	Adapter Cylinder Inlet	1001-4075-000	a
6.	O-Ring 13.1mm ID 1.66mm OD	9221-3013-116	b
7.	Filter Bronze	9914-6380-000	
8.	Retaining Ring	1001-5954-000	c

a Torque to 7.3 N-m (.4 lb-ft)

b Lubricate with Krytox (Stock No 1001-3854-000) or an approved oxygen service lubricant

c Press in

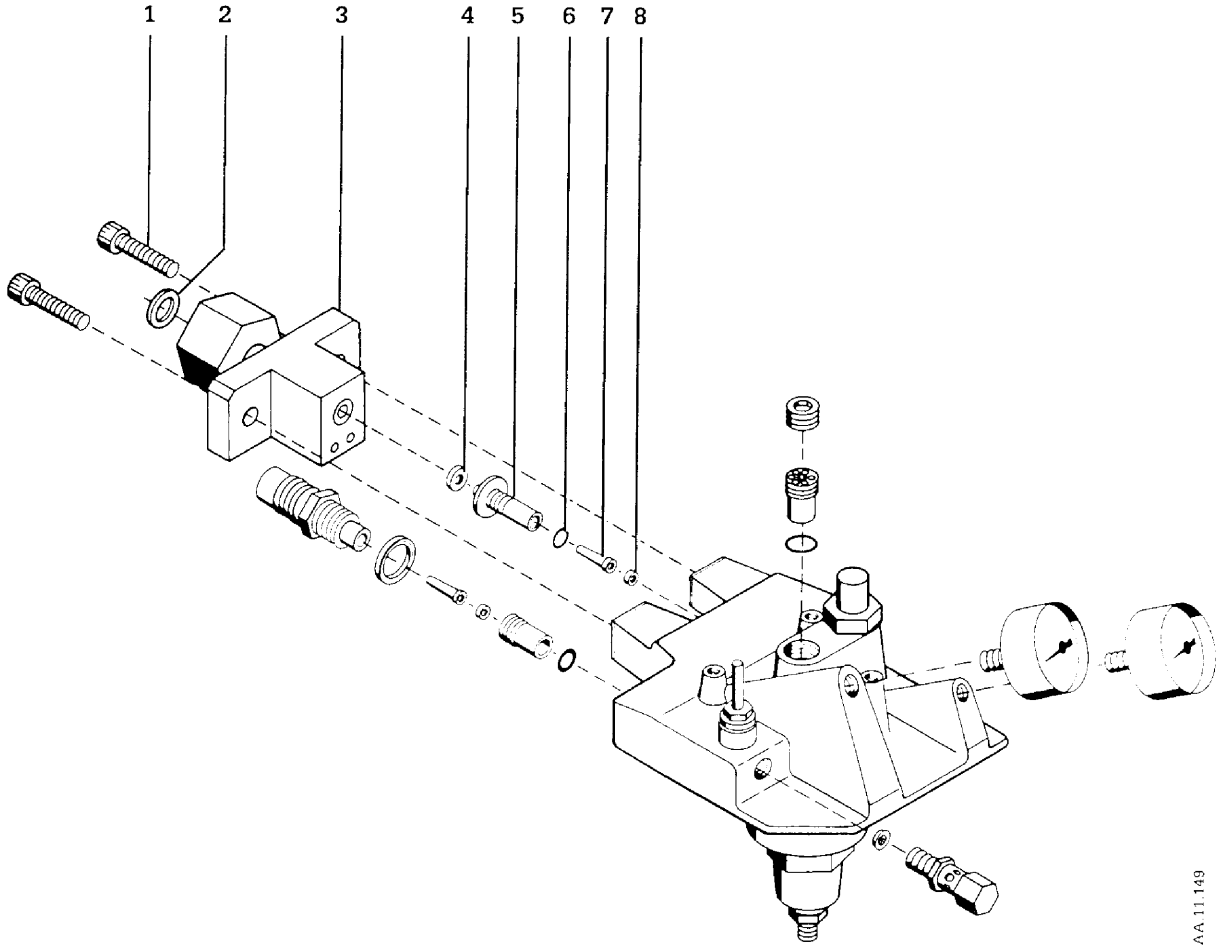

Figure 6-6 DIN 477 Part 1 Cylinder connections (Austrian Air, N_2O and O_2 supplies and German reserve O_2/Air gas supply)

Figure 6-7 Pipeline fittings -- national variations

Item	Description	Stock Number	
1.	Australian Fittings		
a.	Ring Keying		
	Ring Keying O2	1001-5970-000	
	Ring Keying N2O	1001-5971-000	
	Ring Keying Air	1001-5972-000	
b.	Filter Body (Australian)		a
	Filter Body O2	1001-5964-000	
	Filter Body N2O	1001-5965-000	
	Filter Body Air	1001-5966-000	
c.	Seal Bonded		b
	Seal Bonded O2 M18	9224-0618-232	
	Seal Bonded N2O M20	9224-0620-233	
	Seal Bonded Air M16	9224-0616-229	
2.	Air Liquide (French) Fittings		
a.	Seal 18mm OD 10mm ID	1010-3220-000	
b.	Filter Body (Air Liquide)		a
	Filter Body O2	1010-7046-000	
	Filter Body N2O	1010-7047-000	
	Filter Body Air	1010-7048-000	
c.	Seal Bonded		b
	Seal Bonded O2 M18	9224-0618-232	
	Seal Bonded N2O M20	9224-0620-233	
	Seal Bonded Air M16	9224-0616-229	
3.	Spri (Scandinavian) Fittings		
a.	Filter Body (Spri)		a
	Filter Body O2	1001-8937-000	
	Filter Body N2O	1001-8938-000	
	Filter Body Air	1001-8939-000	
b.	Seal Bonded		b
	Seal Bonded O2 M18	9224-0618-232	
	Seal Bonded N2O M20	9224-0620-233	
	Seal Bonded Air M16	9224-0616-229	

a Torque filter bodies to: O2 and air 40.7 ± 2.0 N-m (30±1.5 lb-ft) ; N2O 54.2 ± 2.7 N-m (40±2 lb-ft)

b Apply Krytox (Stock No 1001-3854-000) or an approved oxygen service lubricant

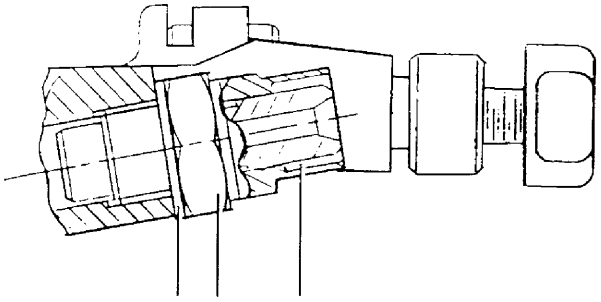

1. Australian Fittings

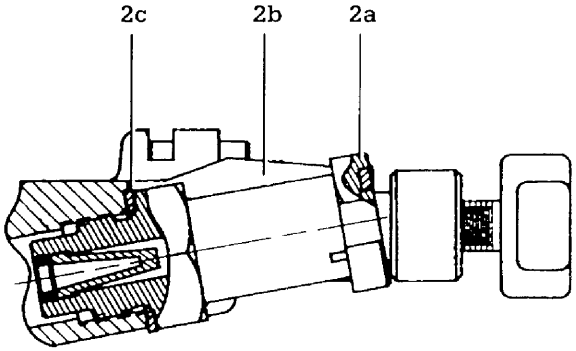

2. French Fittings (Air Liquide)

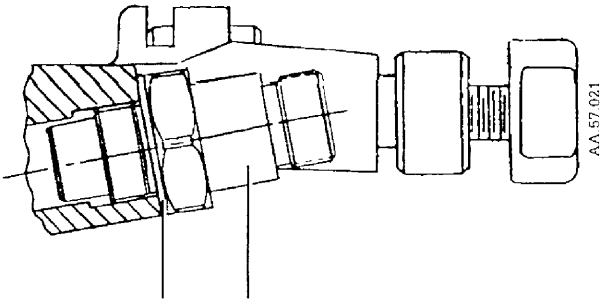

3. Scandinavian Fittings (Spri)

Figure 6-7 Pipeline fittings -- national variations

Figure 6-8 Pneumatic components 2

Item	Description	Stock Number		Parts Breakdown
1.	Alarm Assembly O2 Low Pressure	1001-8934-000		Figure 6-9
2.	Tie Cable 11-1/2L Bar Lock	0203-5917-300		
3.	Mount Cable Tie w/ Adhesive	0690-1240-336		
4.	Exhaust Block Valve Assembly		a	
	w/ Check Valve (Australia, France, ISO 110, Italy, Scandinavia)	1001-7047-000		
	w/o Check Valve (Austria, ISO 210, 410, Spain, Switzerland)	1001-7046-000		
5.	Common Gas Outlet Kit. Replace			
	Left Fixed (Australian, Italian, ISO 110)	1001-7062-000		Figure 6-10
	Left Swivel	1001-7061-000		Figure 6-11
	Right Swivel	1001-7060-000		Figure 6-11
	Dual Port (French)	1001-7973-000		Figure 6-12
	Left Fixed Taper (German, Scandinavian)	1001-7947-000		Figure 6-13
6.	Coverplate Patient Interface	1001-4228-000		
7.	Screw M5x8 Button Head (6)	9211-1050-085		
8.	Screw M4x6 Button Head SST (4)	9211-1040-067		
9.	Screw M3x6 Button Head (2)	9211-1030-055		
10.	Washer EXT LCK-10 (4)	0202-3211-300		
11.	O2 Flush Shroud	1001-4088-000		
12.	Label Set, Regulator Needle Valve Austria	1001-3814-000		
	Label Set, Regulator Needle Valve Germany	1001-3793-000		
	Label Set, Regulator Needle Valve Switzerland	1001-3801-000		
	Label Set, Regulator Needle Valve ISO	1001-3978-000		
13.	Switch Assembly On/Off		b c	
	Telemachinique Sw German Without Harness	1001-7981-000	d	
	Telemachinique Sw Harness	1001-7936-000		
	Telemachinique Sw & Harness (Vertical Screws)	1001-7935-000		
	Telemachinique Sw & Harness (Horizontal Screws)	1001-7979-000		
	Kay Pneumatics Switch	2910-0066-000		
	Upgrade harness for Kay (Req. for 7800 vent)	1001-7961-000		
14.	Main Label Set			
	Austria 210	1002-3905-000		
	Australia 210 (Order Both)	1002-3901-000		
	Australia 210 (Order Both)	1002-3910-000		
	France 210	1002-3917-000		
	German 210	1002-3920-000		
	ISO 110	1005-3905-000		
	ISO 210	1002-3901-000		
	ISO 410	1004-3902-000		
	Italy 110	1005-3904-000		
	Italy 210	1002-3902-000		
	Spain 110	1005-3906-000		
	Spain 210	1002-3906-000		
	Scandinavia 210	1002-3908-000		
	Switzerland 210	1002-3903-000		
15.	Plate Cover Common Gas Outlet	1001-5936-000		
16.	Power Outlet Block; (Complete Assembly)			
	2 O2/1Air	1001-7055-000		
	2 O2	1001-7056-000		
	Scandinavia (right power outlet)	1001-8940-000		
	Scandinavia (left power outlet)	1001-8941-000		
	Power Outlet Fittings			
	O2 Coupling Mini-Schrader	1001-3765-000		
	Air Coupling Mini-Schrader	1001-3766-000		
	O2 Coupling SPRI (Scandinavia)	1001-3876-000		
	Air Coupling SPRI (Scandinavia)	1001-3877-000		
	Power Outlet Seals			
	O2 Dowty	9947-0473-000		
	Air Dowty	9224-0111-312		

a German Excels do not have an exhaust block.

b To replace Kay Pneumatics switch with a Telemachinique switch replace all tubing to the switch & add a 6 mm Tee fitting (1001-3516-000)

c Vertical & horizontal refer to mounting screw alignment. Switches are not interchangeable.

d The German switch and the harness can only be ordered separately. There is no kit.

	Description	Stock Number	Parts Breakdown
17.	Screw 6-32 x 1/4 (2)	0140-6624-104	
18.	Bracket Shutoff Valve Mounting	1001-5905-000	
19.	Washer EXT LCK M4 (6)	9213-0540-003	
20.	Nut M4 x 0.7 Thick (6)	9212-0140-003	
21.	Shroud, System Master Switch (Kit)	1001-8815-000	
22.	Visual Low O2 indicator Assy (Australia)	1001-7934-000	

	Description (French Detail)	Stock Number	Parts Breakdown
23.	Flush Assy France (Not part of common gas outlet)	1001-7974-000	Figure 6-12
24.	Lockwasher Ext M4 DIN (3)	9213-0540-003	
25.	Lockwasher Ext M8 DIN (3)	0202-3211-300	
26.	Adapter 1/16 ID Tube	0204-8909-735	
27.	Washer Flat 0.5ID 0.75 OD	0144-1025-171	
28.	Gasket Coupling	0210-5229-300	
29.	Coupling Body 1/8 Barb	0204-8912-300	

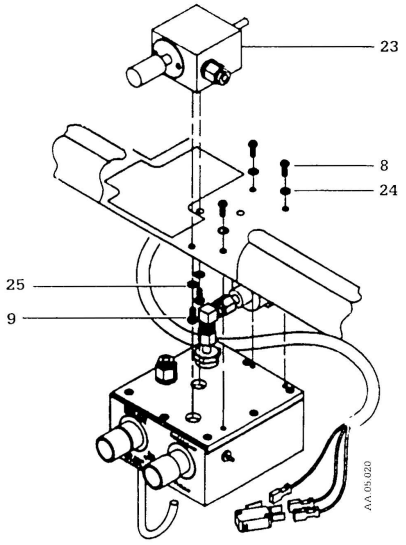

France

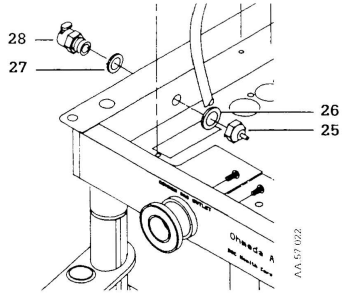

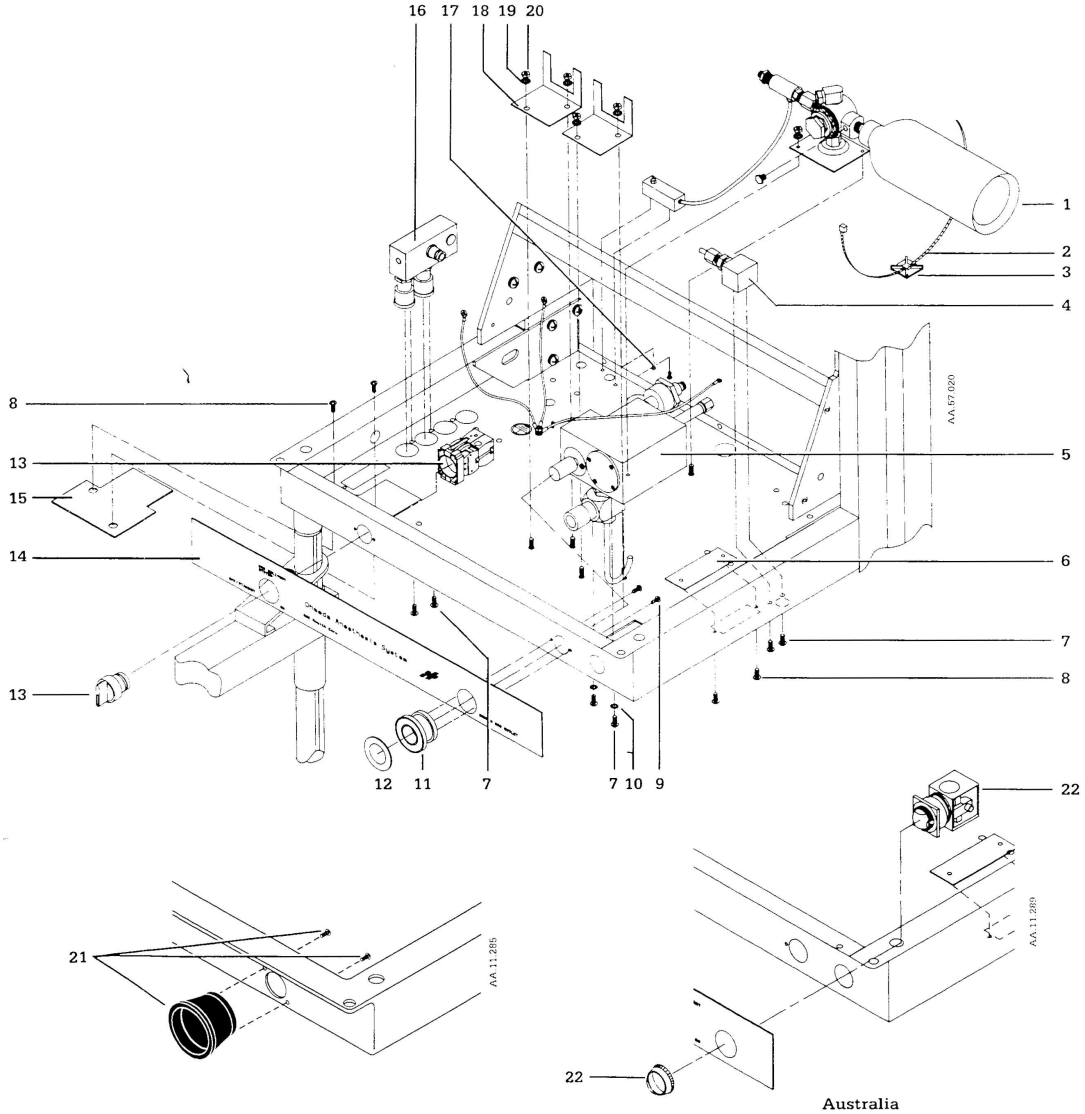

Australia

Figure 6-8 Pneumatic components 2

Figure 6-9 Low O_2 pressure alarm (1001-8934-000 complete)

Item	Description	Stock Number	
1.	Screen, Gas Inlet 150 mesh (3)	0214-7107-325	
2.	Connector Reservoir	1001-5843-000	a
3.	O-Ring 0.750ID 1OD 0.124W	0210-0609-300	a
4.	Container, Pressure, 16 oz.	1001-3865-000	a
5.	Plug	1001-3722-000	a, b
6.	Plug, Spacer w/Groove	0402-1812-500	
7.	Bracket, Reg. Mtg.	0234-1088-510	
8	Ring, Retaining Bowed	0203-5364-300	
9.	Alarm, Reed	0219-7595-300	
10.	Tube 27.5 in Long	0994-6356-010	
11.	Orifice .64mm Hose Barb	0204-8755-300	
12.	Nut, Jam, 5/16-40	0402-1713-500	
13.	Screw, Regulator Adjusting 5/16-40	0400-4946-500	
14.	Flow Regulator Single Stage	0306-0639-300	
15.	Valve, Check w/Spring Orifice	0207-5583-800	
16.	Alarm Regulator Wilkerson Non Relieving	1001-8996-000	
17.	Fitting Straight Tubing 6 mm (w/ o-ring)	1001-3506-000	
18.	Street Elbow 1/8NPT	0213-4005-300	
	Not Shown	**Stock Number**	
	Fitting, Low O2 indicator Connection	1001-5843-000	c
	Low O2 Indicator Assembly	1001-7934-000	
	Label Set Excel 210 w/ O2 Indictor	1002-3910-000	c
	Tube 6mm OD Nylon (13 in) 330 mm	1001-3062-000	c

a These items will not work on the older style of alarm assembly. Instead of replacing the item, upgrade the assembly by replacing all items marked with a "a".

b The plug must be ordered separately to replace the visual low O2 pressure indicator fitting.

c Use with visual O2 failure indicator (Australian Excel). Fitting replaces the plug (item 5)

Notes:: Seal all pipe threads with 1/4 inch Teflon tape (Stock Number 0220-5050-300); lubricate o-rings lightly with Krytox (Stock Number 1001-3854-000) or an approved oxygen service lubricant

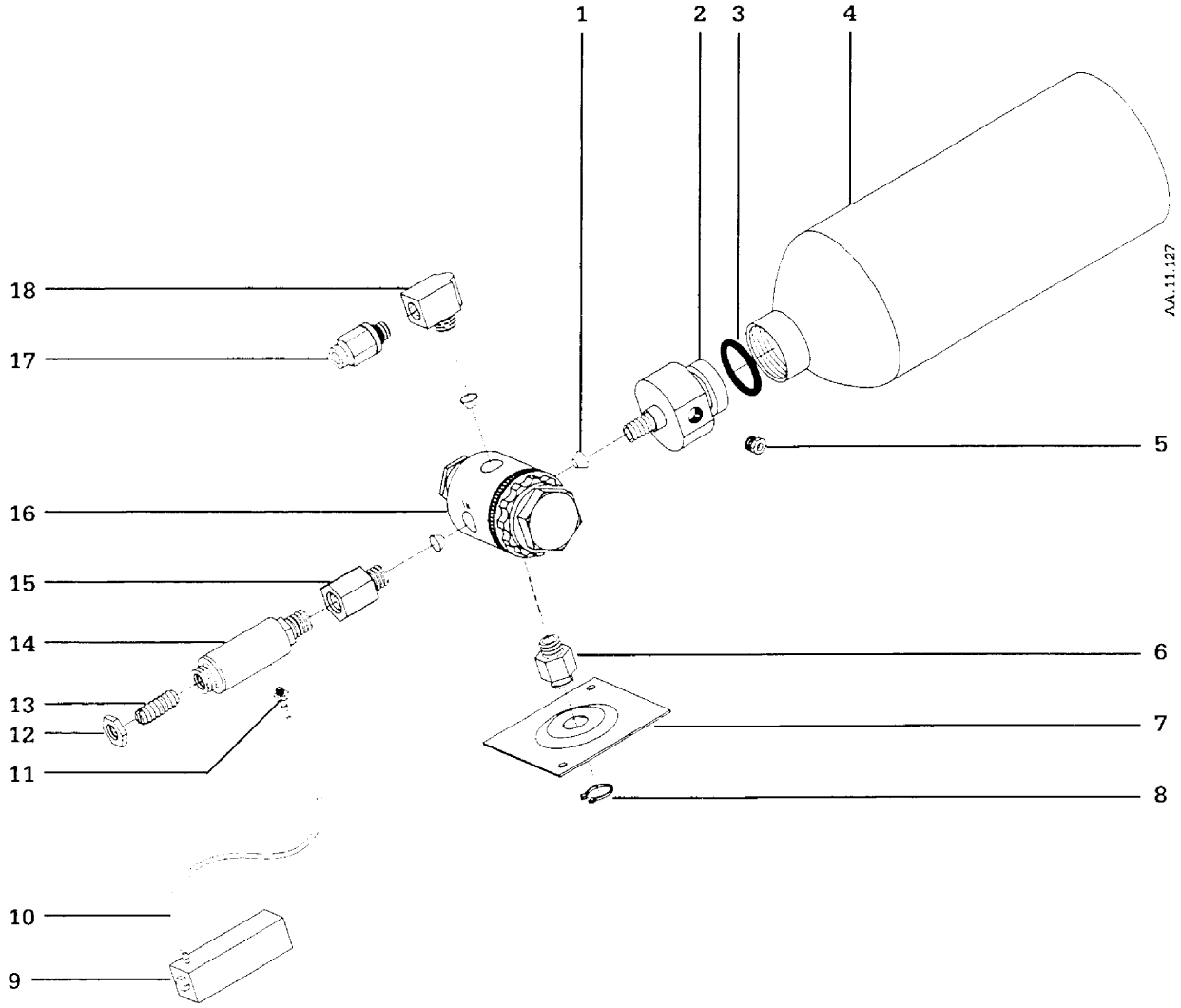

Figure 6-9 Low O_2 pressure alarm

Figure 6-10 Left fixed common gas outlet assembly (Stock Number 1001-7062-000)

Used with 110 ISO; Italian; and Australian Excels

Item	Description	Stock Number	
1.	O-Ring 25.1mm ID 1.6mm DI	9221-3025-116	
2.	Adapter, Non Return, (ANSI)	1001-4229-000	
3.	Valve Flapper	0211-1451-100	a
4.	Fitting Straight Tubing 6 mm	1001-3506-000	
5.	Valve Schrader	1001-3544-000	a
6.	Push-button Assembly O2 Flush	2910-0061-000	b
a.	Ring, Retaining Ext.	9216-2000-008	
b.	O-Ring 15.1 mm ID 1.6 mm	9221-3015-116	a
c.	O-Ring 5.1 mm ID 1.6 mm	9221-3005-116	a
d.	Adapter O2 Flush	1001-4219-000	
e.	Spring, Comp	1001-3046-000	
f.	Button, O2 Flush	1001-4218-000	
7.	Screw, M3x10 Ch. Hd. (2)	9211-0130-106	
8.	O-Ring 16.6mm ID 2.4mm DI	9221-3016-624	
9.	Outlet Assembly.	1001-7090-000	
10.	Screw, M4x20 Cap. Soc. Hd (3)	9211-0640-203	
11.	Valve Assembly Pressure Relief	1001-7080-000	
12.	Seal Bonded	9224-0311-012	

Not Shown	Stock Number
Common Gas Outlet Service Kit (all items marked by "a" above)	2910-0003-000

a Included in common gas outlet service kit.

b Includes two screws (item 7).

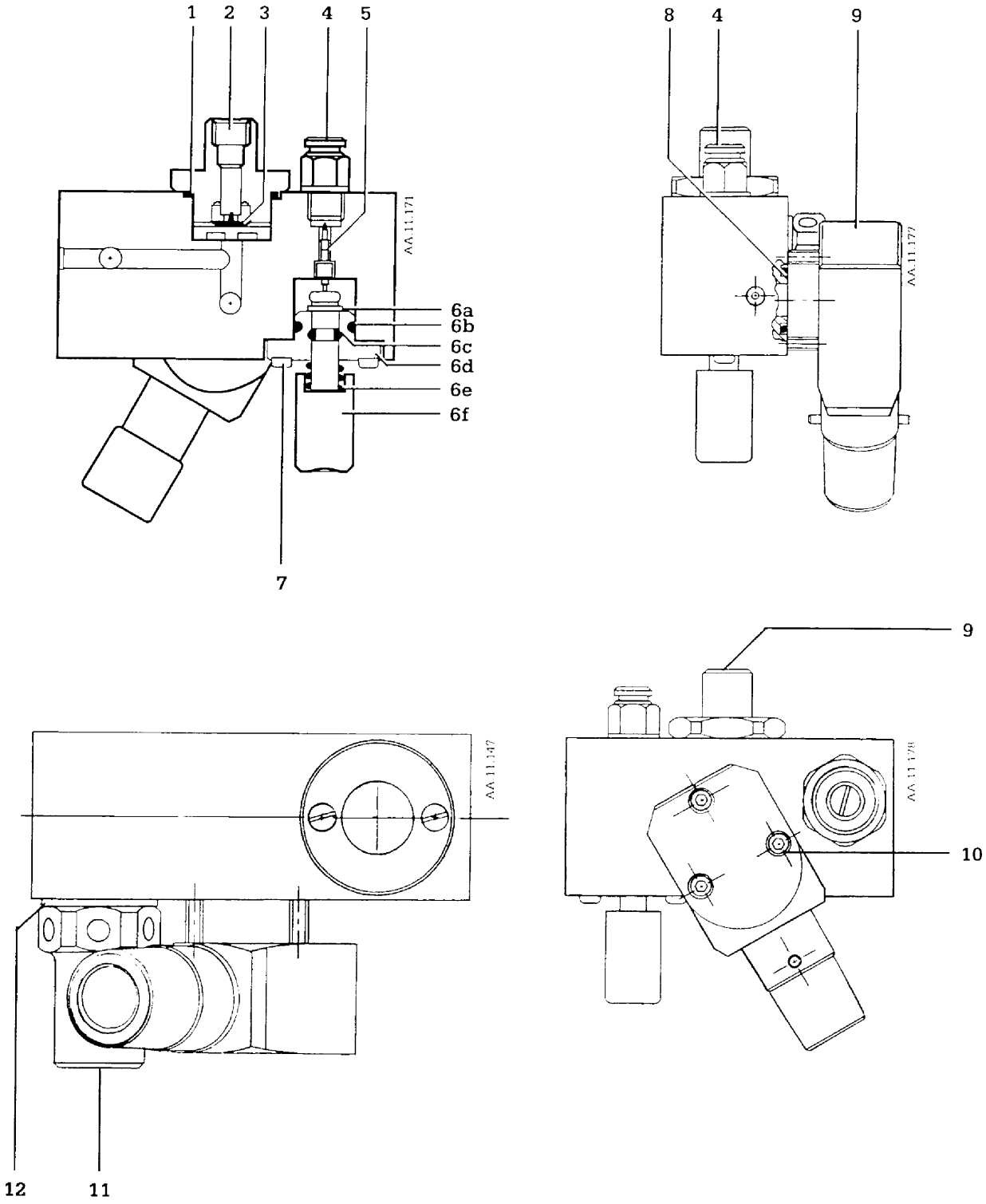

Figure 6-10 Left fixed common gas outlet assembly

Figure 6-11 Swivel common gas outlet assembly

Right Hand Outlet (Austria, Spain, Switzerland, Some 210 & 410 Excels) 1001-7060-000
Left Hand Outlet (Some 210 & 410 Excels) 1001-7061-000

Note: All components listed work with either outlet.

Item	Description	Stock Number	
1.	Check Valve Assembly	1001-7141-000	a
a.	Flapper Valve	0211-1451-100	
b.	O-Ring 25.1mmID 1.6mmDI	9221-3025-116	
2.	Air Entrainment Valve Ring Lock	1001-4266-000	
3.	Air Entrainment Valve Adapter	1001-4209-000	
4.	Air Inlet Valve	1001-7069-000	
5.	Disconnect Valve Regulator	1001-7142-000	
6.	O-Ring 16.6x21.4 mm Diameter	9221-3016-624	b
7.	Seal Bonded	9224-0311-012	
8.	Screen Gas Inlet 150 Mesh	1001-3784-000	
9.	Pressure Relief Valve	1001-7080-000	
10.	Swivel Outlet Body	1001-4215-000	c
11.	Spring 15.88 ID x 2.51	1001-3716-000	
12.	O-Ring 20.4 x15.6mm Diameter (2)	9221-3015-624	b
13.	Washer 20x 30 mm Diameter (2)	1001-4217-000	b
14.	Spring Com 7.62 ODx15.75	1001-3775-000	
15.	Outlet Swivel	1001-4216-000	
16.	Hook Common Gas Outlet ISO	1001-5838-000	c
17.	Hook Retainer	1001-5778-000	
18.	Retaining Ring 0.156 Shaft	0203-5226-300	
19.	Retaining Ring (Circlip)	9216-2000-200	
20.	Screw M3x6 Flush Pan Head (4)	9211-0230-066	
21.	Cover Plate	1001-4220-000	
22.	O-Ring 1.375 ID x 1.5 IN Dia	1001-3753-000	
23.	Screw M3x14 Slot Head (3)	0140-6219-112	
24.	Disconnect Valve w/ O-Ring	2910-0059-000	d
25.	Push-button Assembly O2 Flush	2910-0061-000	e
a.	Button, O2 Flush	1001-4218-000	
b.	O-Ring 5.1x1.6 mm Diameter	9221-3005-116	b
c.	Spring, Comp	1001-3046-000	
d.	Adapter O2 Flush	1001-4219-000	
e.	O-Ring 15.1 x 1.6 mm Diameter	9221-3015-116	b
f.	Retaining Ring O2 Flush	9216-2000-008	
26.	Screw, M3x10 Ch. Hd. (2)	9211-0130-106	
27.	Schrader Valve	1001-3544-000	b
28.	Fitting Straight Tubing 6 mm	1001-3506-000	

Not Shown	Stock Number
Swivel Com. Gas Outlet Serv. Kit (All items marked with "b")	2910-0002-000

a Included in the non return adapter assembly. May also be ordered separately.
b Included in ISO Common Gas Outlet Service Kit.
c The body swivel outlet and the hook have been redesigned so the hook retainer screws into the body. Replace old style hooks and body swivel outlets together. Order items 10, 11, 12 (two), and 16-19.
d Includes O-ring item 20.
e Includes two screws (item 25).

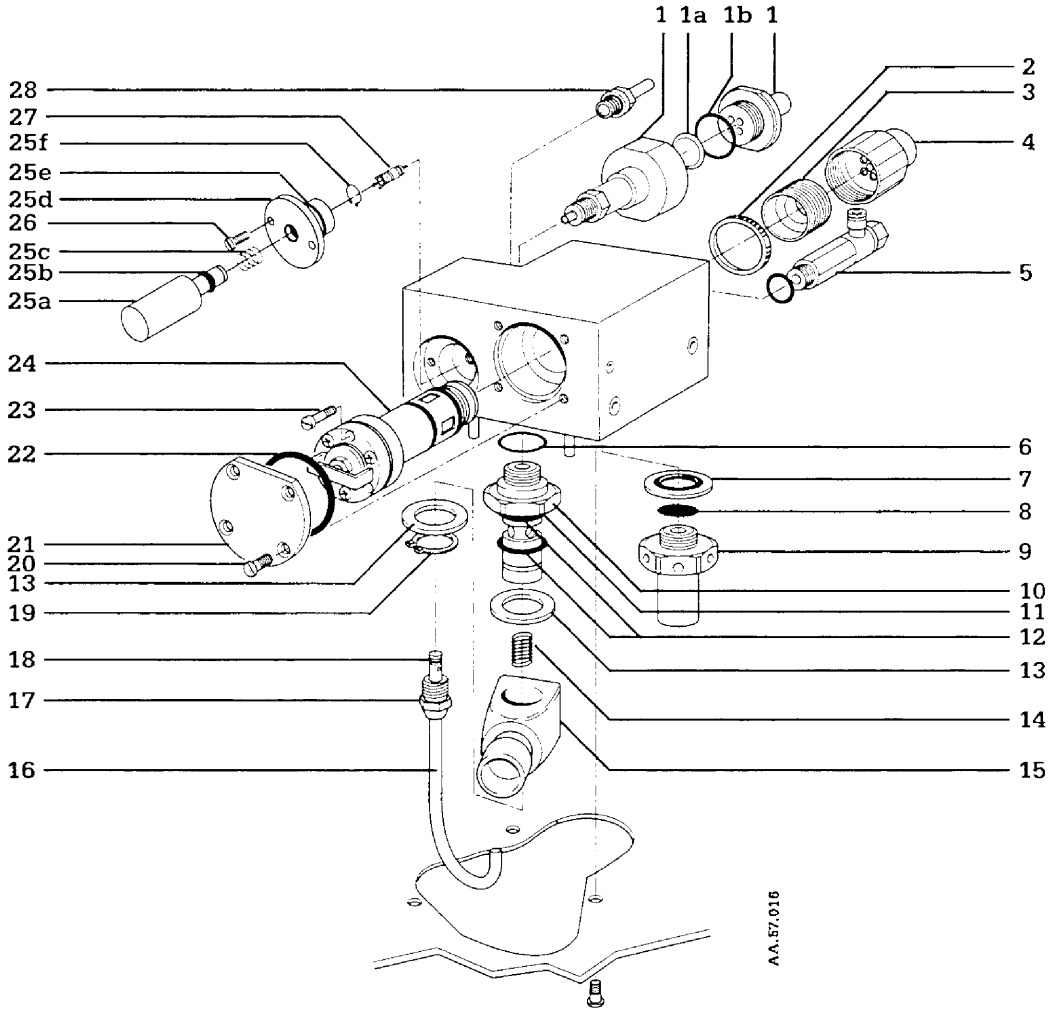

Figure 6-11 Swivel common gas outlet assembly

Figure 6-12 Tapered ISO common gas outlet (Stock Number 1001-7947-000)

Used with Scandinavian and German Excels.

Item		Description	Stock Number	
1.		O-Ring 25.1mm ID 1.6mm DI	9221-3025-116	
2.		Adapter, Non Return, (ANSI)	1001-4229-000	
3.		Fitting Straight Tubing 6 mm	1001-3506-000	
4.		Valve Schrader	1001-3544-000	a
5.		Push-button Assy O2 Flush	2910-0061-000	b
	a.	Ring, Retaining Ext.	9216-2000-008	
	b.	O-Ring 15.1 mm ID 1.6 mm	9221-3015-116	a
	c.	O-Ring 5.1 mm ID 1.6 mm	9221-3005-116	a
	d.	Adapter O2 Flush	1001-4219-000	
	e.	Spring, Comp	1001-3046-000	
	f.	Button, O2 Flush	1001-4218-000	
6.		Screw, M3x10 Ch. Hd. (2)	9211-0130-106	
7.		O-Ring 16.6mm ID 2.4mm DI	9221-3016-624	
8.		Outlet Assy.	1001-5837-000	
9.		Screw, M4x20 Cap. Soc. Hd (3)	9211-0640-203	
10.		Valve Assy Pressure Relief	1001-7080-000	
11.		Seal Bonded	9224-0311-012	
12.		Screen Filter 150 Mesh	1001-3784-000	
		Not Shown	**Stock Number**	
		ANSI Common Gas Outlet Service Kit	2910-0003-000	c

a Included in ANSI Common Gas Outlet Service Kit.

b Includes two screws (item 6).

c Kit includes a flapper valve that is not used in this common gas outlet.

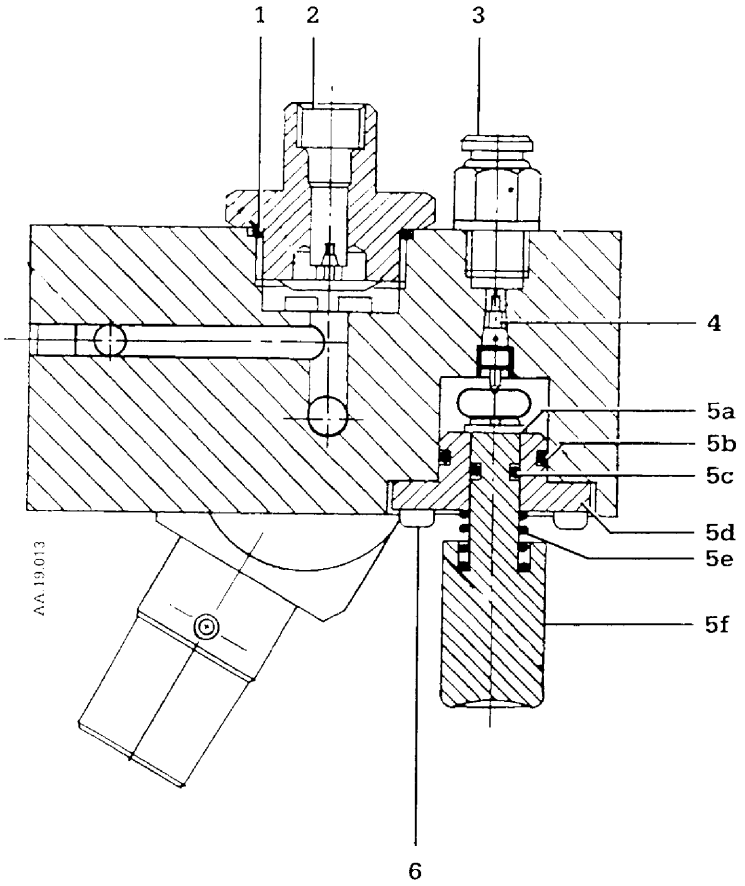

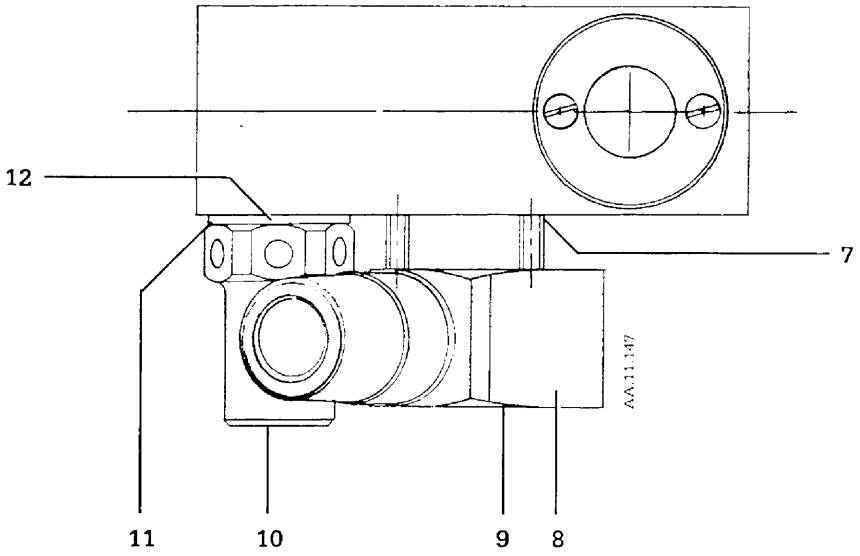

Figure 6-12 Tapered ISO common gas outlet

Figure 6-13 Dual port common gas outlet w/ separate flush (France)

Dual port common gas outlet (items 1-49)..... 1001-7973-000
Flush valve assembly (items 50-54)..... 1001-7974-000

Item	Description	Stock Number	
1.	Plate Valve	0214-1502-500	
2.	Washer #10	0144-1110-331	
3.	Screw 10-24 x 3/8 inch	0144-2130-206	a, b
4.	Bracket Support	0229-2062-500	
5.	Bearing Nylon 0.25 in Diameter	0209-0082-300	
6.	Shaft Selector Valve	1001-5772-000	
7.	O-Ring 0.25 ID 0.375OD	0210-0687-300	c
8.	Knob Selector Valve	1001-5773-000	
9.	Screw 4-40 x 1/2 inch	0140-6117-109	a,
10.	Washer #4 Flat	0144-1004-131	
11.	Retainer Cover	0229-2060-500	
12.	Screw 6-32 x 7/16 inch (2)	0144-2124-207	a, b
13.	Cup Seal (2)	0229-2007-100	
14.	Screw 4-40 x 3/8 in (2)	0144-2117-206	a
15.	Bracket Pivot	0229-2085-200	
16.	Valve Assembly Non Return	1001-8991-000	
17.	Fitting Tubing 6 mm	1001-3521-000	
18.	Cover Dual Common Gas Outlet	1001-5774-000	
19.	Gasket Dual Common Gas	1001-3767-000	
20.	Spring	0203-3504-300	
21.	Washer 0.438ODx1.28ID	0402-1044-500	
22.	Ring Truarc, 0.125 inch Shaft (2)	0203-5361-300	
23.	Pin Pivot	0229-2059-500	
24.	Bearing 0.13 in diamx0.25 in Long	0209-0081-300	
25.	Roller	0229-2056-500	
26.	Shaft Retaining Ring	0229-2061-500	
27.	Label Common Gas Vent/Aux	1002-3912-000	
28.	Auxiliary Outlet Port	1010-5038-000	
29.	Ventilator Outlet Port	0236-0458-735	
30.	O-Ring 0.5, 0.65in I/O Diameter (2)	0210-0539-300	c
31.	Set screw 10-40 x 1/4 inch (4)	0141-4130-108	
32.	Hook ISO Common Gas Outlet	1001-5838-000	
33.	Retainer Hook (Dual Port)	1001-5778-000	
34.	Ring Truarc 0.156 Shaft	0203-5226-300	
35.	Spring Com 7.62 OD x 15.75 L	1001-3775-000	
36.	Sleeve Pivot Pin	0229-2057-500	
37.	Nut Hex 7/16 - 20 Brass	1001-3769-000	
38.	Screw 6-32 x 3/8 inch (8)	0144-2424-206	
39.	Fitting 1/4 in Tube to O-ring	1001-3764-000	
40.	Elbow Union 90°	1001-3768-000	
41.	Screw 4-40 x 5/8 inch (2)	0140-6517-110	
42.	Shield Microswitch	1001-5777-000	
43.	Valve Assembly Pressure Relief	1001-7080-000	
44.	Seal Bonded	9224-0311-000	
45.	Switch Electrical Snap Action	1001-3772-000	
46.	Screw 10-24 x 3/8 inch (2)	0140-6130-106	
47.	Clamp Cable 1/8 in (2)	1001-3773-000	
48.	O-Ring 1/8x1/4x1/16 inch	0210-0547-300	
49.	Adapter Barbed 1/16in Diameter	0204-8904-542	
50	Screw, M3x10 Ch. Hd. (2)	9211-0130-106	
51.	Push-button Assembly O2 Flush	2910-0061--000	d
a.	Ring, Retaining Ext.	9216-2000-008	
b.	O-Ring 15.1 mm ID 1.6 mm	9221-3015-116	
c.	O-Ring 5.1 mm ID 1.6 mm	9221-3005-116	
d.	Adapter O2 Flush	1001-4219-000	
e.	Spring, Comp	1001-3046-000	
f.	Button, O2 Flush	1001-4218-000	
52.	Valve Schrader	1001-3544-000	
53.	Fitting Straight Tubing 6 mm	1001-3506-000	
54.	Fitting Tubing 6 mm	1001-3521-000	

a Apply Loctite 242 (Stock No 0220-5016-000) or an approved equivalent.
b Torque to 0.56 N-m
c Sparingly apply Krytox (Stock No 1001-3854-000) or an approved oxygen service lubricant
d Includes two screws (item 46)

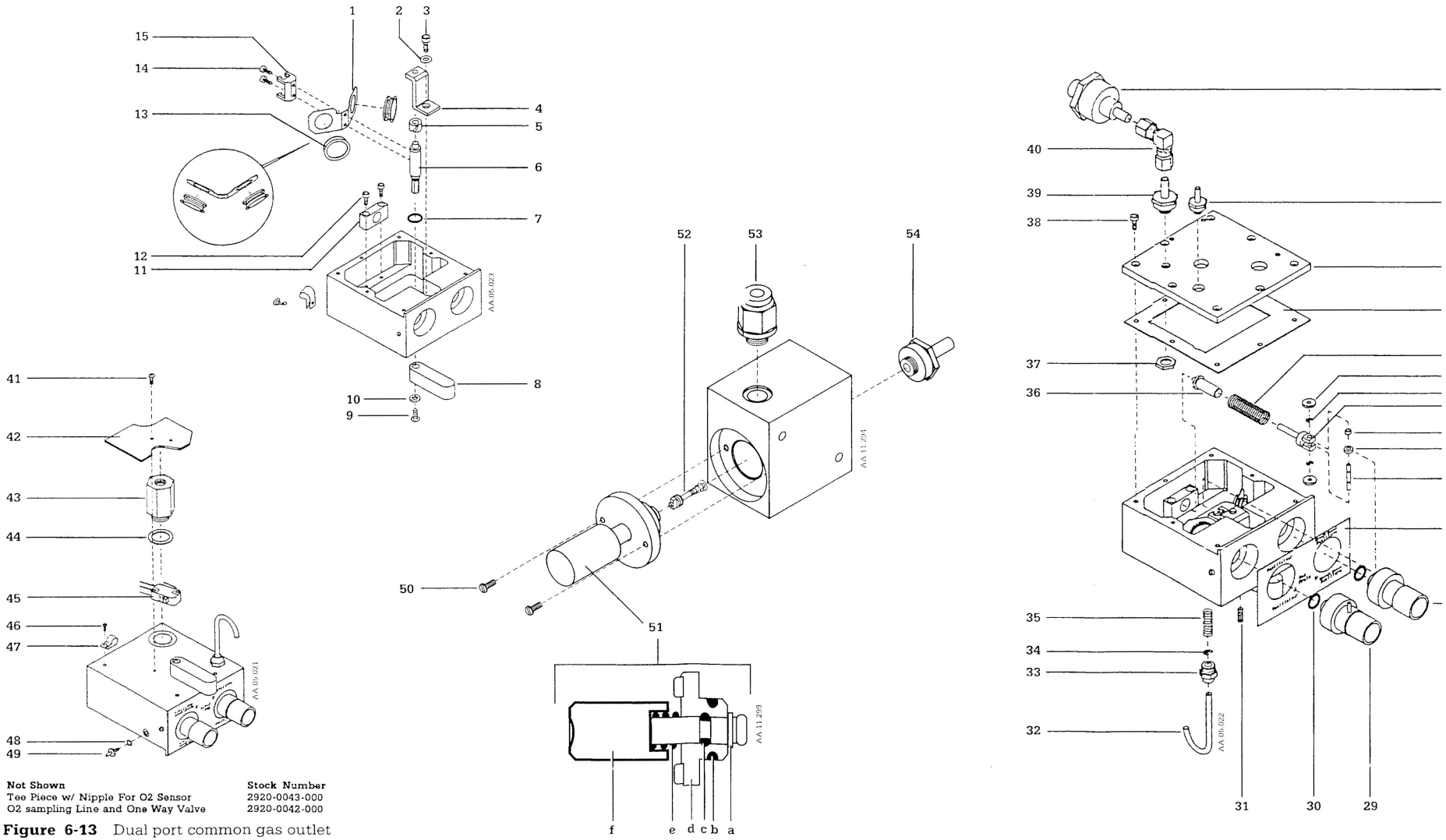

Not Shown	Stock Number
Tee Piece w/ Nipple For O2 Sensor	2920-0043-000
O2 sampling Line and One Way Valve	2920-0042-000

Figure 6-13 Dual port common gas outlet

Figure 6-14 What the fittings look like

Item	Description	Stock Number
1.	Connector Straight Tubing	
	For 4mm outer dia tube (CO2)	1001-3524-000
	For 5mm outer dia tube(N2O)	1001-3525-000
	For 6mm outer dia tube(O2)	1001-3526-000
	For 8mm outer dia tube(Air)	1001-3528-000
2.	Ferrule Enots (2)	9913-6562-700
3.	Fitting Elbow	
	For 4mm outer dia tube (CO2)	1001-3510-000
	For 5mm outer dia tube (N2O)	1001-3511-000
	For 6mm outer dia tube (O2)	1001-3512-000
	For 8mm outer dia tube (Air)	1001-3513-000
4.	Fitting Standoff	
	For 4mm outer dia tube (CO2)	1001-3519-000
	For 5mm outer dia tube (N2O)	1001-3520-000
	For 6mm outer dia tube (O2)	1001-3521-000
	For 8mm outer dia tube (Air)	1001-3522-000
5.	Fitting Straight	
	For 4mm outer dia tube (CO2)	1001-3504-000
	For 5mm outer dia tube (N2O)	1001-3505-000
	For 6mm outer dia tube (O2)	1001-3506-000
	For 8mm outer dia tube (Air)	1001-3508-000
6.	Fitting Tee	
	For 4mm outer dia tube (CO2)	1001-3514-000
	For 5mm outer dia tube (N2O)	1001-3515-000
	For 6mm outer dia tube (O2)	1001-3516-000
	For 8mm outer dia tube (Air)	1001-3518-000
7.	Nut Enots (2)	9913-6562-600
8.	Street Elbow 1/8NPT	0213-4005-300

Not Shown	Stock Number	
Nylon Tubes		
1/4 in outer dia (mixed gas)	1001-3064-000	Specify Length when you order
4mm outer dia (CO2)	1001-3060-000	
5mm outer dia N2O)	1001-3061-000	
6mm outer dia (O2)	1001-3062-000	
8mm outer dia (Air)	1001-3063-000	

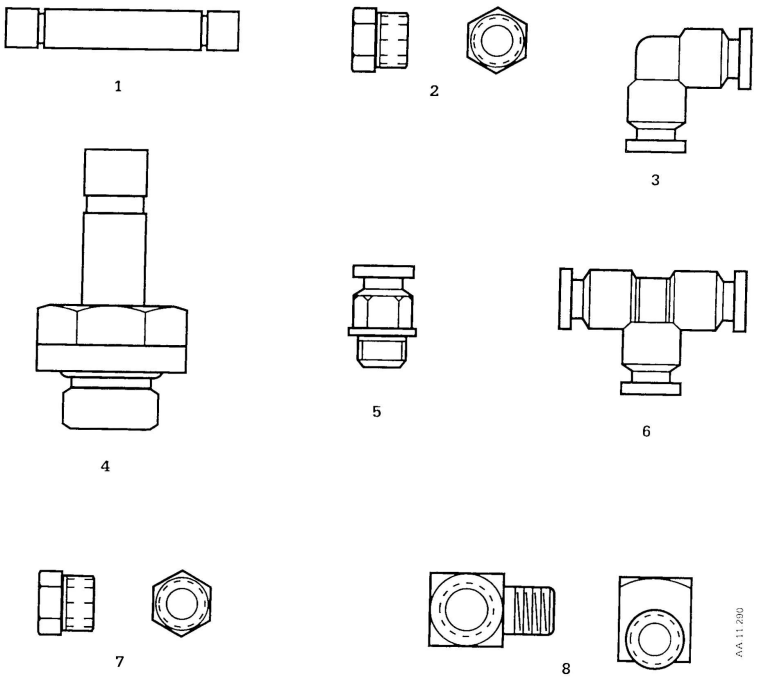

Figure 6-14 What the fittings look like

Figure 6-15 Flowmeter modules, only four gas shown

Complete Flowmeter Assembly	Stock No	
O2 and N2O (dual O2 and N2O tubes) ISO Labels	2910-0077-000	
O2, N2O, Air (dual O2 and N2O tubes) ISO Labels	2910-0072-000	
O2, N2O, CO2 (dual O2 & N2O tubes) ISO Labels	2910-0071-000	
O2, N2O, CO2 (single O2 & N2O tubes) ISO Labels	2910-0078-000	
O2, N2O, Air, CO2 (dual O2 & N2O tubes) ISO Labels	2910-0070-000	
O2, N2O, Air, CO2 (single O2 & N2O tubes) ISO Labels	2910-0080-000	
Austria, Germany, Switzerland (O2, N2O, Air) Order Correct National Labels Separately	2910-0072-000	a
France (O2, N2O, Air) Order ISO Labels Separately	1001-7968-000	a

Flowmeter Assy Labels	O2 Flowtube Label (color)	N2O Flowtube Label (color)	Air Flowtube Label (color)	CO2 Flowtube Label (color)	Reg/Needle Valve Label
ISO Color Code	1001-4126-000 White	1001-4128-000 Blue	1001-4130-000 Black/White	1001-3558-000 Gray	1001-3978-000
Austrian Color Code	1001-4127-000 Blue	1001-3820-000 Yellow	1001-4131-000 Gray	_____	1001-3814-000
German Color Code	1001-4127-000 Blue	1001-3790-000 Gray	1001-4129-000 Yellow	_____	1001-3793-000
Swiss Color Code	1001-4127-000 Blue	1001-3806-000 Green	1001-3807-000 Brown	_____	1001-3801-000

Item	Description	Stock Number		Parts Breakdown
1.	Block, Top Universal (3, 2 or 1)	1001-4190-000	b	
2.	Plug 11 mm (2, 1, or 0)	9226-1132-110	b	
3.	CO2 Flowtube Kit w/ ISO label	2910-0015-000	c	Figure 6-21
4.	Air Flowtube Kit w/ ISO label	2910-0016-000	a c	Figure 6-21
5.	Air/CO2 Needle Valve, Knob & Disposables	2910-0083-000	d	Figure 6-20
	Air/CO2 Needle Valve & Disposables	1001-7950-000	d	Figure 6-20
6.	Screw M6x50 Cp Hd use w/ 4 gas (2)	9211-0660-504		
	Screw Set Cup Point use w/ 3 gas(5)	9211-0830-055		
7.	Fitting Straight Tubing 8mm (Air)	1001-3508-000		
8.	Fitting Straight Tubing 4 mm (CO2)	1001-3504-000		
9	Fitting Straight Tubing 5mm N2O (3 or 1)	1001-3505-000	b	
10.	Fitting Straight Tubing 6 mm (O2) (3 or 1)	1001-3506-000	b	
11.	Chain, Link Stainless Steel	1001-3052-000		
12.	O2 Needle Valve, Knob, Disposables & Sprocket 25%O2	2910-0081-000	d	Figure 6-18
	O2 Needle Valve & Disposables 25% O2	1001-7948-000	d	
	O2 Needle Valve French 30% O2 (Valve only)	1001-7967-000	d	
13.	N2O Needle Valve, Knob & Disposables 25% O2	2910-0082-000	d	Figure 6-19
	N2O Needle Valve & Disposables 25% O2	1001-7949-000	d	
	N2O Needle Valve French 30% O2 (Valve only)	1001-7969-000	d	
14.	O2 Flowtube Service Kit			Figure 6-21
	Double Tube w/ ISO label	2910-0012-000	a c	
	Single Tube w/ ISO label	2910-0011-000	a c	
15.	N2O Flowtube Service			Figure 6-21
	Double Tube w/ ISO label	2910-0014-000	a c	
	Single Tube w/ ISO label	2910-0013-000	a c	
16.	Block, Top O2	1001-4189-000		
17.	Tube, 6mm OD Nylon 290 mm	1001-3062-000		
18.	Tube, 5mm OD Nylon 280 mm	1001-3061-000		

a Order national labels separately for German, Swiss, and Austrian Excels. Austrian Excels also require the extra O2 knob (1001-5865-000).

b (x, y, or z) x = quantity on four gas , y= quantity on 3 gas and z = quantity on two gas flowmeters. (x or y) x = quantity with double flow tube, y = quantity with single flow tube.

c Flow tube kits include ISO labels, and o-rings and screws for installation.

d Order the needle valve/regulator label set separately. The disposables include external o-rings and single use set screws. The French valves include only the valve. Order everything else separately.

Figure 6-15 Flowmeter modules, only four gas shown

Complete Flowmeter Assembly	Stock No	
O2 and N2O (dual O2 and N2O tubes) ISO Labels	2910-0077-000	
O2, N2O, Air (dual O2 and N2O tubes) ISO Labels	2910-0072-000	
O2, N2O, CO2 (dual O2 & N2O tubes) ISO Labels	2910-0071-000	
O2, N2O, CO2 (single O2 & N2O tubes) ISO Labels	2910-0078-000	
O2, N2O, Air, CO2 (dual O2 & N2O tubes) ISO Labels	2910-0070-000	
O2, N2O, Air, CO2 (single O2 & N2O tubes) ISO Labels	2910-0080-000	
Austria, Germany, Switzerland (O2, N2O, Air) Order Correct National Labels Separately	2910-0072-000	a
France (O2, N2O, Air) Order ISO Labels Separately	1001-7968-000	a

Flowmeter Assy Labels	O2 Flowtube Label (color)	N2O Flowtube Label (color)	Air Flowtube Label (color)	CO2 Flowtube Label (color)	Reg/Needle Valve Label
ISO Color Code	1001-4126-000 White	1001-4128-000 Blue	1001-4130-000 Black/White	1001-3558-000 Gray	1001-3978-000
Austrian Color Code	1001-4127-000 Blue	1001-3820-000 Yellow	1001-4131-000 Gray	_____	1001-3814-000
German Color Code	1001-4127-000 Blue	1001-3790-000 Gray	1001-4129-000 Yellow	_____	1001-3793-000
Swiss Color Code	1001-4127-000 Blue	1001-3806-000 Green	1001-3807-000 Brown	_____	1001-3801-000

Item	Description	Stock Number		Parts Breakdown
1.	Block, Top Universal (3, 2 or 1)	1001-4190-000	b	
2.	Plug 11 mm (2, 1, or 0)	9226-1132-110	b	
3.	CO2 Flowtube Kit w/ ISO label	2910-0015-000	c	Figure 6-21
4.	Air Flowtube Kit w/ ISO label	2910-0016-000	a c	Figure 6-21
5.	Air/CO2 Needle Valve, Knob & Disposables	2910-0083-000	d	Figure 6-20
	Air/CO2 Needle Valve & Disposables	1001-7950-000	d	Figure 6-20
6.	Screw M6x50 Cp Hd use w/ 4 gas (2)	9211-0660-504		
	Screw Set Cup Point use w/ 3 gas(5)	9211-0830-055		
7.	Fitting Straight Tubing 8mm (Air)	1001-3508-000		
8.	Fitting Straight Tubing 4 mm (CO2)	1001-3504-000		
9	Fitting Straight Tubing 5mm N2O (3 or 1)	1001-3505-000	b	
10.	Fitting Straight Tubing 6 mm (O2) (3 or 1)	1001-3506-000	b	
11.	Chain, Link Stainless Steel	1001-3052-000		
12.	O2 Needle Valve, Knob, Disposables & Sprocket 25%O2	2910-0081-000	d	Figure 6-18
	O2 Needle Valve & Disposables 25% O2	1001-7948-000	d	
	O2 Needle Valve French 30% O2 (Valve only)	1001-7967-000	d	
13.	N2O Needle Valve, Knob & Disposables 25% O2	2910-0082-000	d	Figure 6-19
	N2O Needle Valve & Disposables 25% O2	1001-7949-000	d	
	N2O Needle Valve French 30% O2 (Valve only)	1001-7969-000	d	
14.	O2 Flowtube Service Kit			Figure 6-21
	Double Tube w/ ISO label	2910-0012-000	a c	
	Single Tube w/ ISO label	2910-0011-000	a c	
15.	N2O Flowtube Service			Figure 6-21
	Double Tube w/ ISO label	2910-0014-000	a c	
	Single Tube w/ ISO label	2910-0013-000	a c	
16.	Block, Top O2	1001-4189-000		
17.	Tube, 6mm OD Nylon 290 mm	1001-3062-000		
18.	Tube, 5mm OD Nylon 280 mm	1001-3061-000		

a Order national labels separately for German, Swiss, and Austrian Excels. Austrian Excels also require the extra O2 knob (1001-5865-000).

b (x, y, or z) x = quantity on four gas , y= quantity on 3 gas and z = quantity on two gas flowmeters. (x or y) x = quantity with double flow tube, y = quantity with single flow tube.

c Flow tube kits include ISO labels, and o-rings and screws for installation.

d Order the needle valve/regulator label set separately. The disposables include external o-rings and single use set screws. The French valves include only the valve. Order everything else separately.

Item	Description	Stock Number		Parts Breakdown
19.	Pillar Flowmeter (4, 3 or 2)	1001-4188-000	b	
20.	Coupling, Test Pt (3)	1001-3543-000		
21.	Screw M6x16 Socket Set (4, 3 or 2)	9211-0760-165	b	
22.	Regulator Flowmeter (2)	----------	a	Figure 6-19
23.	O-Ring 16.1 mm Inner Dia x 19.3OD	9221-3016-116		
24.	Flapper Valve	0211-1451-100		
25.	O-Ring 25.1mmID 1.6mmDI	9221-3025-116		
26.	Fitting Outlet Block	1001-4179-000		
27.	Housing Valve Flowmeter	1001-4180-000		
28.	Plug Flowmeter	1001-4181-000		
29.	Screw M4x30 Cap Hd (2)	9211-0640-304		

a Order national labels separately for German, Swiss, and Austrian Excels. Austrian Excels also require the extra O2 knob (1001-5865-000).

b (x, y, or z) x = quantity on four gas , y= quantity on 3 gas and z = quantity on two gas flowmeters. (x or y) x = quantity with double flow tube, y = quantity with single flow tube.

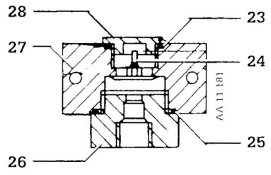

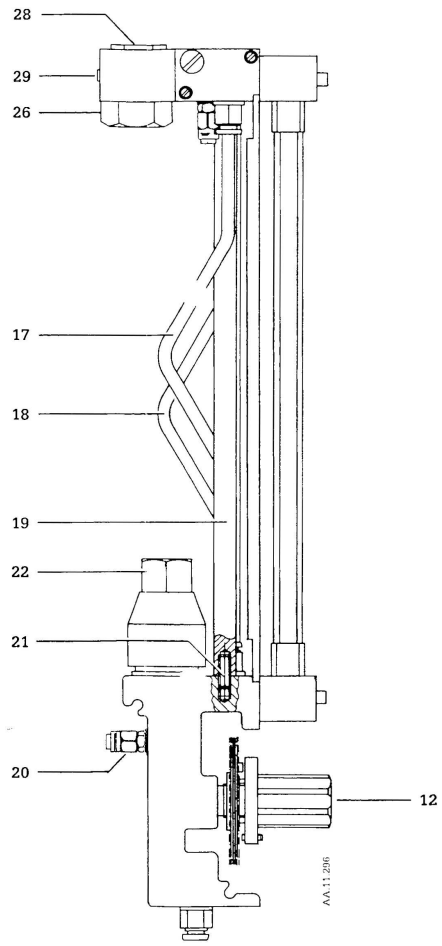

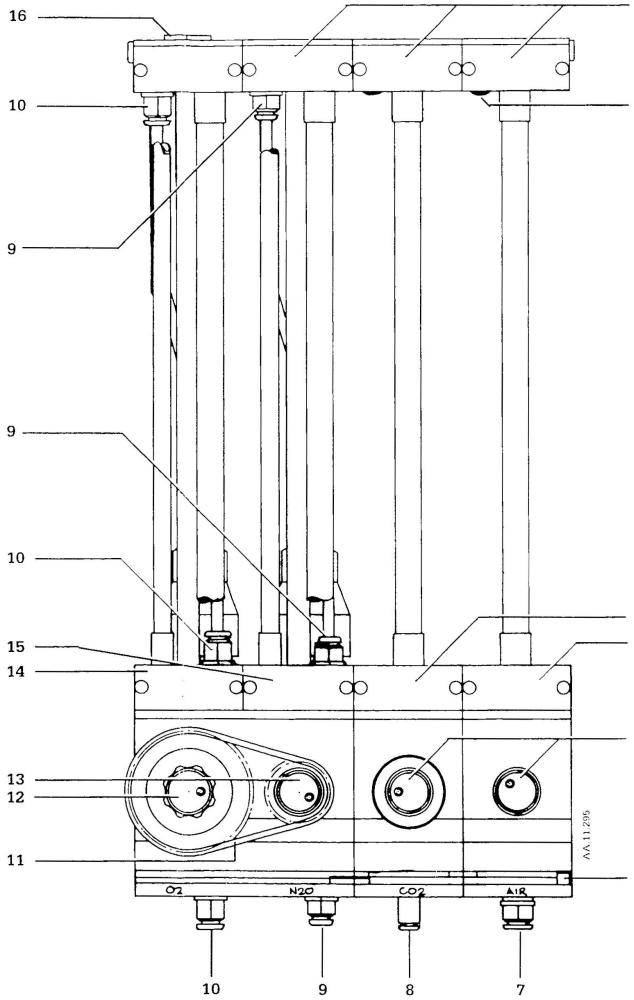

Figure 6-15 Flowmeter modules

Figure 6-16 Flowmeter modules, only four gas shown

Item	Description	Stock Number	
1.	O-Ring 4.6mm ID 2.4mm DI (3, 2 or 1)	9221-3004-624	a
2a.	Tie Rod Gas Flowmeter (2)		
	Three or Four Gas Flowmeters	1001-4260-000	
	Two Gas Flowmeters	1001-4261-000	
3.	Screw M3x8 PH ST (4, 2 or 2)	9211-0430-083	
4.	O-Ring 6.1mmID 1.6mm (14, 12, or 10)	9221-3006-116	
5.	Screw M6x25 Socket Head (4 , 3 or 2)	9211-0660-254	a
6.	Screw M5x10 Pan Head Phillips (2)	9211-8350-103	
7.	O-Ring 0.187 ID 0.312OD (2)	0210-0566-300	
8.	Screw M3x30 Cap Hd (16, 12, or 8)	9211-0630-304	a

Not Shown	Stock Number	
Flowmeter Rear Cover, Excel 410	1004-4097-000	b
Flowmeter Rear Cover, Excel 210	1002-5924-000	b
Flowmeter Rear Cover, Excel 110	1005-5915-000	b

a (x, y, or z) x = quantity on four gas , y= quantity on 3 gas and z = quantity on two gas flowmeters.

b Panel has hole to accommodate internal light package cable.

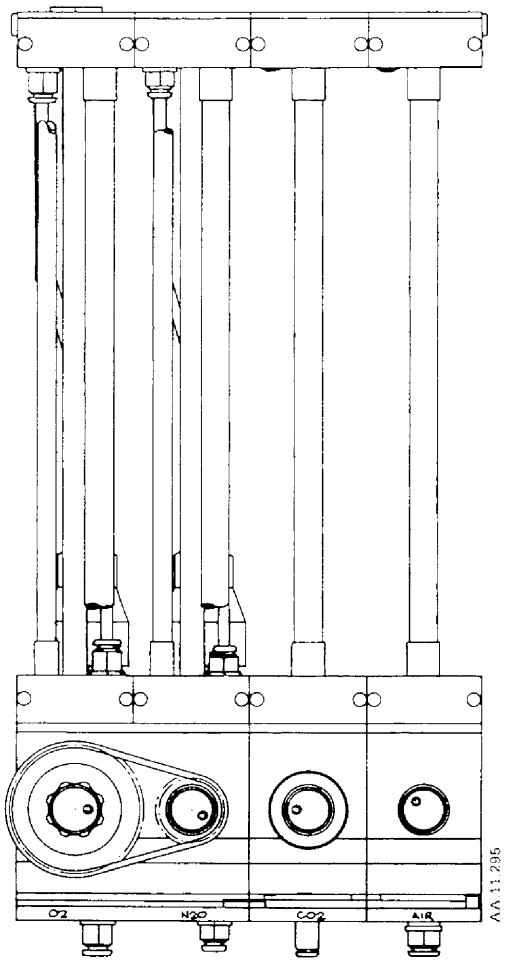

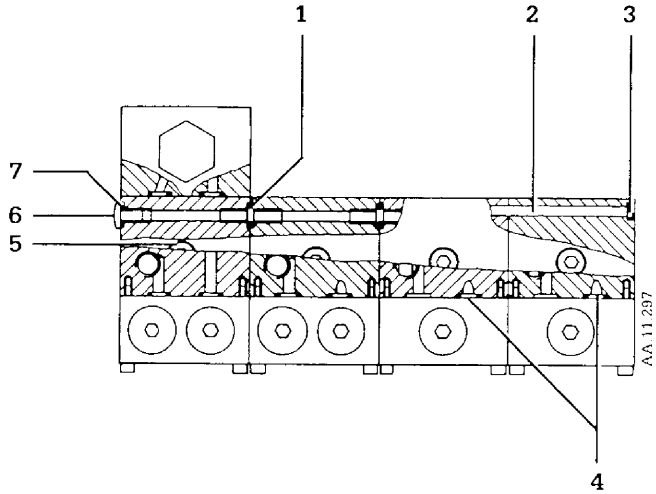

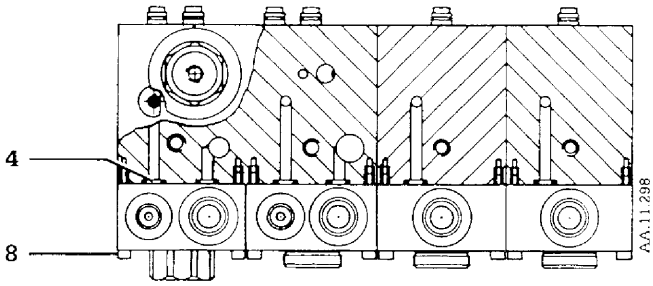

Figure 6-16 Flowmeter modules, only four gas shown

Figure 6-17 Secondary regulator

Item	Description	Stock Number	
1.	Regulator Needle Valve Label Sets		
	ISO Color Code	1001-3978-000	
	Austrian Color Code	1001-3814-000	
	German Color Code	1001-3793-000	
	Swiss Color Code	1001-3801-000	
2.	Screw, M6x16 Hex Soc.	9211-0760-163	
3.	Housing Flowmeter Regulator	1001-4177-000	
4.	Retainer, Upper Spring	1001-4176-000	
5.	Spring, Comp 14GA 12.5DI	1001-3047-000	
6.	Ring, Slip Flowmeter Regulator	1001-3051-000	a
7.	Diaphragm Flowmeter Regulator	1001-3050-000	a
8.	Screw, M3x10 Cap Hd. (3)	9211-0630-104	
9.	Adapter Plate Flowmeter	1001-4174-000	
10.	Seat Regulator Flowmeter	1001-3049-000	a
11.	O-Ring 9.1mmID 1.6mmDI	9221-3009-116	a
12.	Valve Flowmeter Regulator	1001-4221-000	a
13.	Spring, Comp.30GA 5.6mmDI	1001-4178-000	a
14.	O-Ring 22.5mmID 3.0mmDI	9221-3022-530	a
15.	Flowmeter Manifold	————————	

Not Shown	Stock Number
Secondary Regulator Repair Kit	2910-0017-000

a Included in Secondary Regulator Repair Kit. The diaphragm has been redesigned to include what was previously the lower spring retainer.

Note: You must order the regulator and needle valve label set separately.

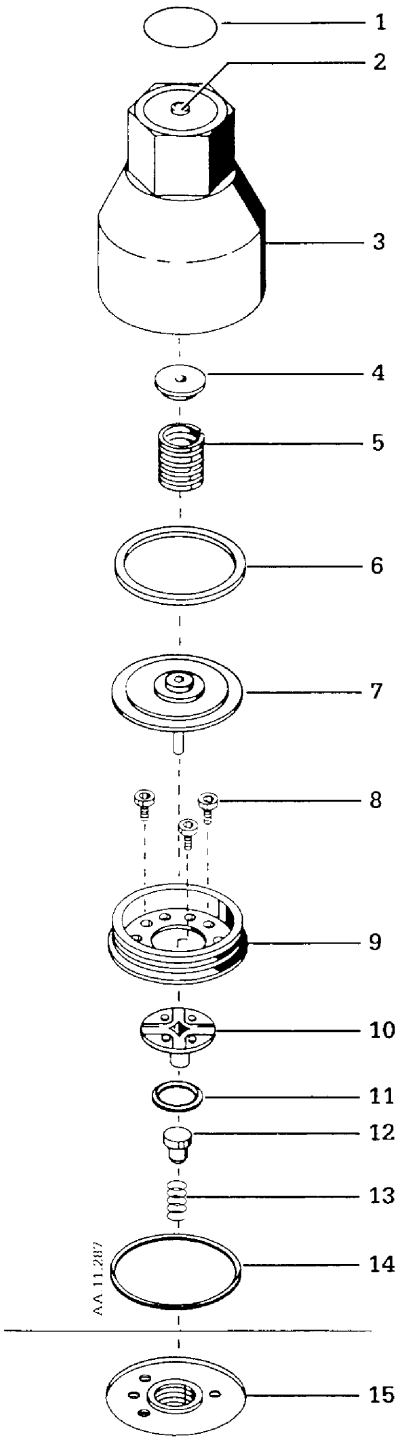

Figure 6-17 Secondary regulator

⚠WARNING: Do not use the standard O_2 needle valve on a French Excel. Because the link system on French Excels is set to a nominal 30% O_2 for O_2/N_2O mixtures, French Excels use a different O_2 needle valve.

Figure 6-18 Needle valve assembly O_2 w/o label (kit parts)

Item	Description	Stock Number	
1.	Regulator Needle Valve Label Sets		a
	ISO Color Code	1001-3978-000	
	Austrian Color Code	1001-3814-000	
	German Color Code	1001-3793-000	
	Swiss Color Code	1001-3801-000	
2.	Set Screw Kit	1001-8814-000	b
a.	M4 x 10 (3)		
b.	Cup Pt. Hex (6)		
3.	Knob Needle Valve O2	1001-4159-000	c
4.	O2 Needle Valve		
	O2 Needle Valve, Knob, Collar, Disposibles & Sprocket 25%O2	2910-0081-000	d
	O2 Needle Valve & Disposibles 25% O2	1001-7948-000	d
	O2 Needle Valve French 30% O2 (Valve only)	1001-7967-000	e
5.	Sprocket, Chain Link	1001-3042-000	c
6.	O-Ring 7.1mmID 1.6mm	9221-3007-116	
7.	O-Ring 10.1mmID 1.6mm	9221-3010-116	
8.	Stop Collar	1001-4162-000	c

a Order a new label set separately or reuse the old labels. These labels are not part of any kit.

b Screw kit is required for link system calibration. Set screws used to attach the knobs to the needle valve shaft and the minimum flow stop screws cannot be reused.

c These items are included in the complete kit (2910-0081-000) but not with the needle valve and disposables kit (1001-7948-000).

d Disposables are external o-rings, three cup point hex set screws (item 2b) to reattach knob, and two M4x10 set screws (item 2a; minimum flow and collar kick-in)

e There is no kit for the French O2 needle valve. Order the disposables and the knob, etc., separately (as required).

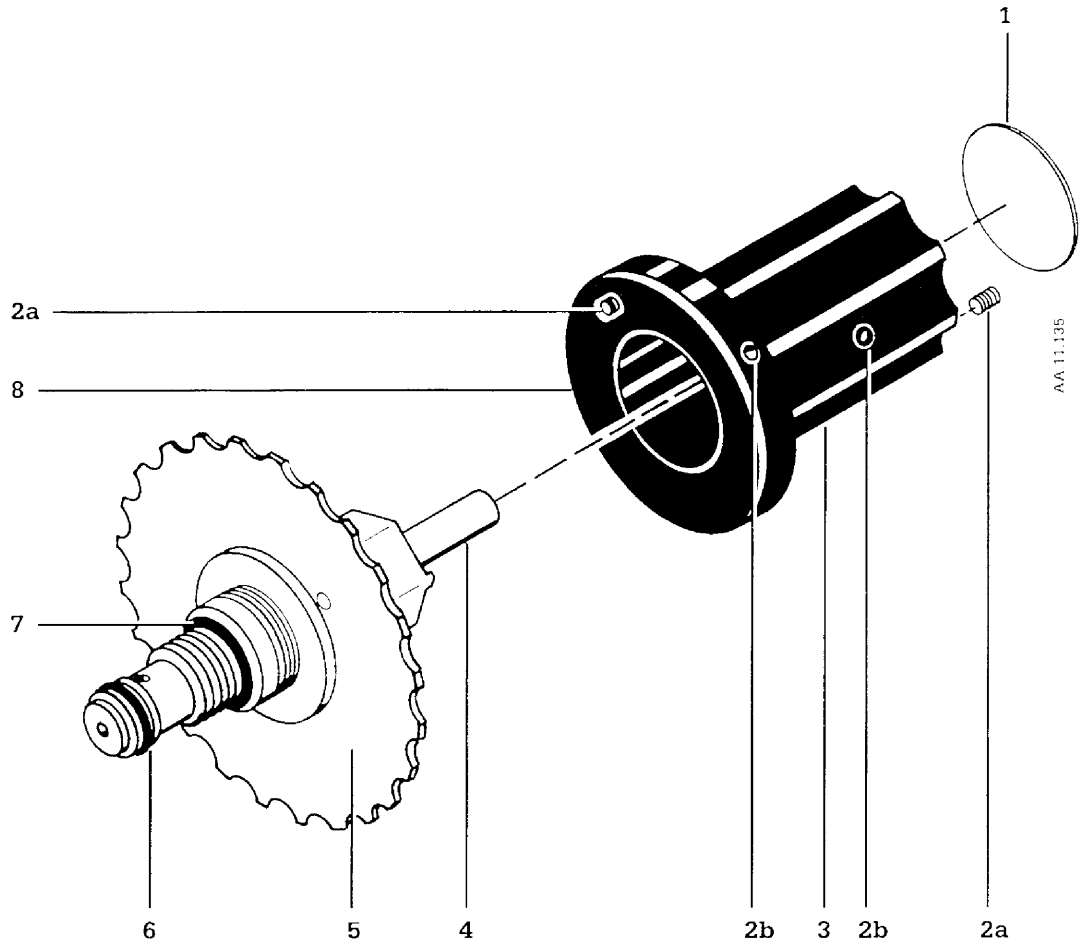

Figure 6-18 Needle valve assembly O_2 w/o label (kit parts)

⚠WARNING: Do not use the standard N_2O needle valve on a French Excel. Because the link system on French Excels is set to a nominal 30% O_2 for O_2/N_2O mixtures, French Excels use a different N_2O needle valve.

Figure 6-19 Needle valve assembly nitrous oxide w/o label (kit parts)

Item	Description	Stock Number	
1.	Regulator Needle Valve Label Sets		a
	ISO Color Code	1001-3978-000	
	Austrian Color Code	1001-3814-000	
	German Color Code	1001-3793-000	
	Swiss Color Code	1001-3801-000	
2.	Set Screw Kit	1001-8814-000	b
a.	M4 x 10 (3)		
b.	Cup Pt. Hex (6)		
3.	Knob N2O w/ Sprocket & Screws	2900-0015-000	c
4.	N2O Needle Valve		d
	N2O Needle Valve, Knob & Disposibles 25% O2	2910-0082-000	d
	N2O Needle Valve & Disposibles 25% O2	1001-7949-000	d
	N2O Needle Valve French 30% O2 (Valve only)	1001-7969-000	e
5.	O-Ring 10.1mmID 1.6mm	9221-3010-116	
6.	O-Ring 7.1mmID 1.6mm	9221-3007-116	

a Order separately or reuse.

b Screw kit is required for link system calibration. Set screws used to attach the knobs to the needle valve shaft and the minimum flow stop screws cannot be reused.

c The knob is included in the complete kit (2910-0082-000) but not with the needle valve and disposables kit (1001-7949-000).

d Disposables are o-rings, three cup point hex set screws (item 4a) to reattach knob, and one M4x10 set screw (item 4b; minimum flow).

e There is no kit for the French N2O Needle Valve. Order the disposables and the knob, etc. separately (as required).

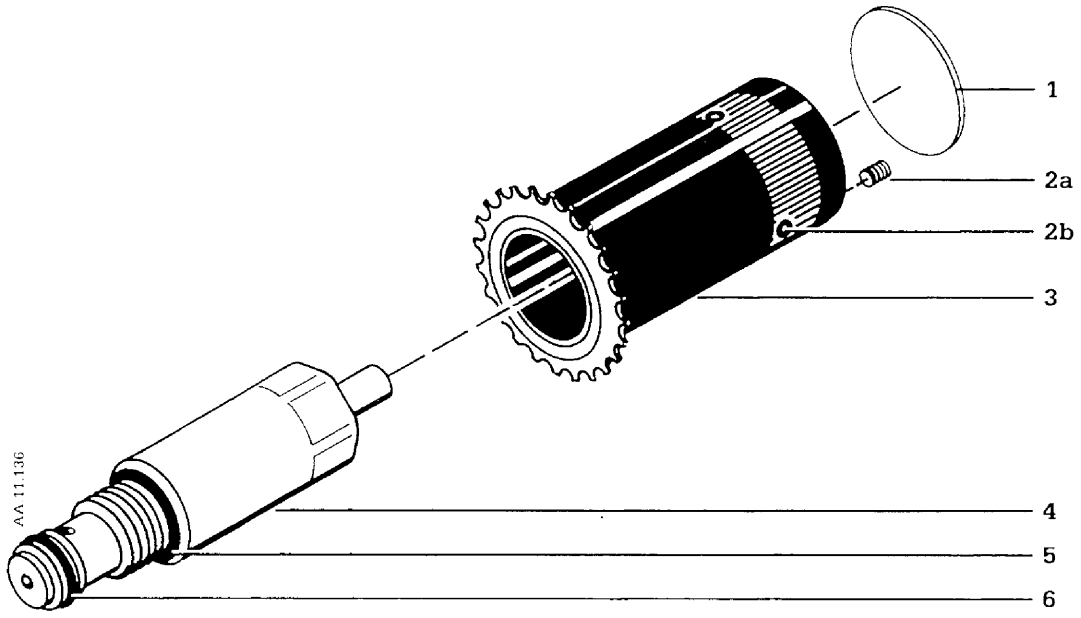

Figure 6-19 Valve needle assembly N_2O w/o label (kit parts)

Figure 6-20 Needle valve assembly air or CO_2 w/o label (kit parts)

Item	Description	Stock Number	
1.	Regulator Needle Valve Label Sets		a
	ISO Color Code	1001-3978-000	
	Austrian Color Code	1001-3814-000	
	German Color Code	1001-3793-000	
	Swiss Color Code	1001-3801-000	
2.	Set Screw Kit	1001-8814-000	
a.	M4 x 10 (3)		
b.	Cup Pt. Hex (6)		
3.	Knob Needle Valve CO2 or Air	1001-4161-000	b
4.	Stop Collar w/o screws	1001-4163-000	a
5.	Air/CO2 Needle Valve, Knob & Disposibles	2910-0083-000	c
	Air/CO2 Needle Valve & Disposibles	1001-7950-000	c
6.	O-Ring 10.1mmID 1.6mm	9221-3010-116	
7.	O-Ring 7.1mmID 1.6mm	9221-3007-116	
8.	Stop Ring w/o Screws	1001-4164-000	a

a These items do not come with either kit. Order separately or reuse.

b The knob is included in the complete kit (2910-0083-000) but not with the needle valve and disposables kit (1001-7950-000); minimum stop and knob attachment screws come with both kits.

c Includes o-rings, three cup point hex set screws (item 2b) to reattach knob, and one M4x10 set screw (item 2a; minimum flow). If you order just the needle valve with disposables, save the old knob for reuse.

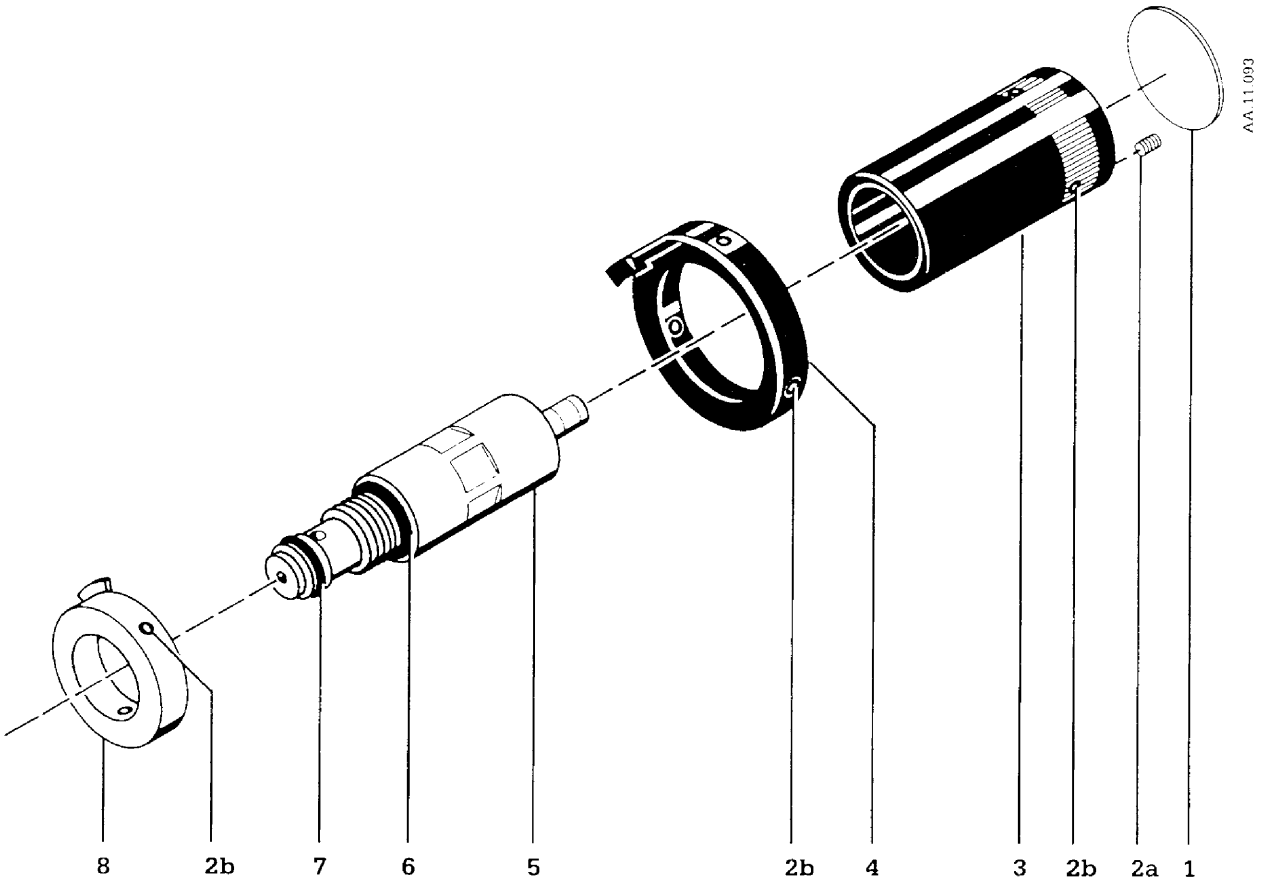

Figure 6-20 Needle Valve assembly air/CO_2 w/o label (kit parts)

Figure 6-21 Flowtube service kits, mounting hardware, and replacement parts

Item	Description	Stock Number
1.	Plug Tube Top Small Tube	1001-4168-000
2.	Plug Tube Top Large Tube	1001-4167-000
3.	O-Ring 12.1mmID1.6mmDI(2/tube)	9221-3012-116
4.	Filter Large Flowtube	1001-3559-000
5.	Bottom Plug Flow Tube	1001-4166-000
6.	Filter Small Flow Tube	1001-3560-000

Not Shown	Stock Number	
CO2 Flowtube Kit w/ ISO label	2910-0015-000	
Air Flowtube Kit w/ ISO label	2910-0016-000	
O2 Flowtube Service Kit		
Double Tube w/ ISO label	2910-0012-000	
Single Tube w/ ISO label	2910-0011-000	
N2O Flowtube Service		
Double Tube w/ ISO label	2910-0014-000	
Single Tube w/ ISO label	2910-0013-000	
Screw M3x30 Cap Head (4)	9211-0630-304	a
O-ring 6.1mm ID, 1.6 mm T (2 or 4)	9211-3006-116	a

Flowmeter Assy Labels	O2 Flowtube Label (color)	N2O Flowtube Label (color)	Air Flowtube Label (color)	CO2 Flowtube Label (color)	Reg/Needle Valve Label
ISO Color Code	1001-4126-000 White	1001-4128-000 Blue	1001-4130-000 Black/White	1001-3558-000 Gray	1001-3978-000
Austrian Color Code	1001-4127-000 Blue	1001-3820-000 Yellow	1001-4131-000 Gray	_____	1001-3814-000
German Color Code	1001-4127-000 Blue	1001-3790-000 Gray	1001-4129-000 Yellow	_____	1001-3793-000
Swiss Color Code	1001-4127-000 Blue	1001-3806-000 Green	1001-3807-000 Brown	_____	1001-3801-000

a Manifold/ flowtube o-rings, flowtube mounting screws, and ISO labels are included in the flowtube kits. Dual flow tubes use 4 o-rings, single tubes use 3.

Note: Kit comes assembled as shown (items 1-6) and includes ISO labels. Order labels separately for Austrian, German and Swiss Excels.

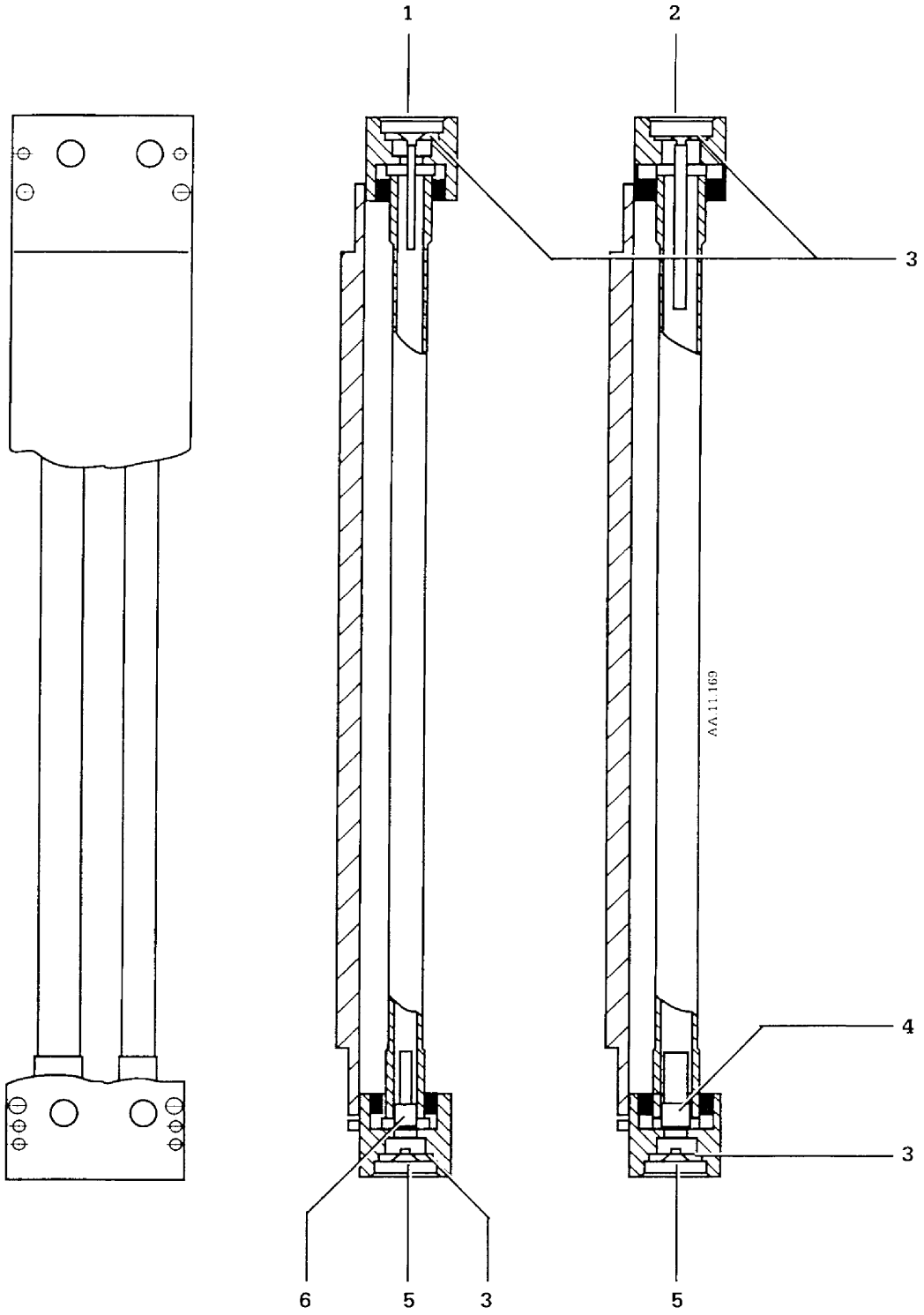

Figure 6-21 Flowtube service kits, mounting hardware, and replacement parts

6.3 Chassis Components

Figure 6-22 Front view

Item	Description	Stock Number	
1.	Bracket Cord Black	0212-3501-100	
2.	Screw M5x12 Socket Head (2)	9211-0650-125	
3.	Screw M6x12 Button Head Black (2)	9211-1060-127	
4.	Washer Lock External M6 (2)	9213-0560-003	
5.	Manifold 2 Vaporizers	1102-8002-000	
	Manifold 2 Vaporizers	1001-7051-000	a
	Manifold 1 Vaporizer (Scandinavia)	1102-8004-000	
	Manifold 3 Vaporizers	1102-8001-000	
	Manifold 3 Vaporizers	1010-3023-000	a
6.	Ferrule Enots 3/8OD (2)	9913-6562-700	
7.	Nuts Enots 3/8OD (2)	9913-6562-600	
8.	Tube 1/4 OD Nylon (0.48 meters)	1001-3064-000	
9.	Tube 1/4 OD Nylon (0.93 meters)	1001-3064-000	
10.	Caster Unbraked (2)	1001-3001-000	
11.	Plug Hole 0.375 DIA Hole (2)	0216-2645-300	
12.	Screw Cap Hd M8x9mm (2)	1001-4004-000	
13.	Caster Braked (2)	1001-3000-000	
14.	Brake Bar		
	410 Excel	1004-7001-000	
	210 Excel	1002-7001-000	
	110 Excel	1005-7001-000	
15.	Spindle Brake 11 mm Hex (2)	1001-4007-000	
16.	Washer Brake Pedal (2)	1001-4008-000	
17.	Pin Spiral 3x20 Std Dty (2)	9214-2103-020	
18.	Cap Rail End Black (4)	0211-1546-300	
19.	Brake Cover		
	410 Excel	1004-4025-000	
	210 Excel	1002-4025-000	
	110 Excel	1005-4025-000	
20.	Strip Anti-Slip Brake		
	410 Excel	1004-3900-000	
	210 Excel	1002-3900-000	
	110 Excel	1005-3903-000	
21.	Vaporizer Port Valve Cartridge (1/port)	1102-7001-000	b
a.	External O-Ring (Quantity 1)	1102-3043-000	
	External O-Ring (Quantity 6)	1102-3016-000	
b.	Upper O-Ring	1102-3015-000	
c.	Middle O-Ring	1102-3042-000	
d.	Lower O-Ring	1102-3021-000	
22.	Dzus Spring & Long Plate w/ Hardware (use w/ 110, 210, & 410 outer vaporizers)	2920-0039-000	
	Dzus Spring & Short Plate w/ Hardware (use w/ 410 middle vaporizer)	2920-0038-000	
	Dzus Spring Only (Works w/ Long or Short Plate)	1102-3056-000	

Not Shown	Stock Number	
Front Panel, 2 Vaporizer Manifold	1001-4078-000	
Front Panel, 3 Vaporizer Manifold	1004-4079-000	c
Interlock Slide & Spring (1 Slide, 1 Spring; 3 Vap Manifolds Only)	2910-0019-000	c
Vap manifold kit (1 port valve, 6 external o-rings, and 1 dzus spring)	2910-0018-000	
Machine Port O-ring (3 Vap Manifolds Only)	1102-3015-000	c

a This Stock Number is being changed to the other number listed. Both are interchangeable.

b Includes locking spring and all o-rings (items 21. a, b, c, d)

c Only used on three vaporizer manifolds. Not used on one or two vaporizer manifolds.

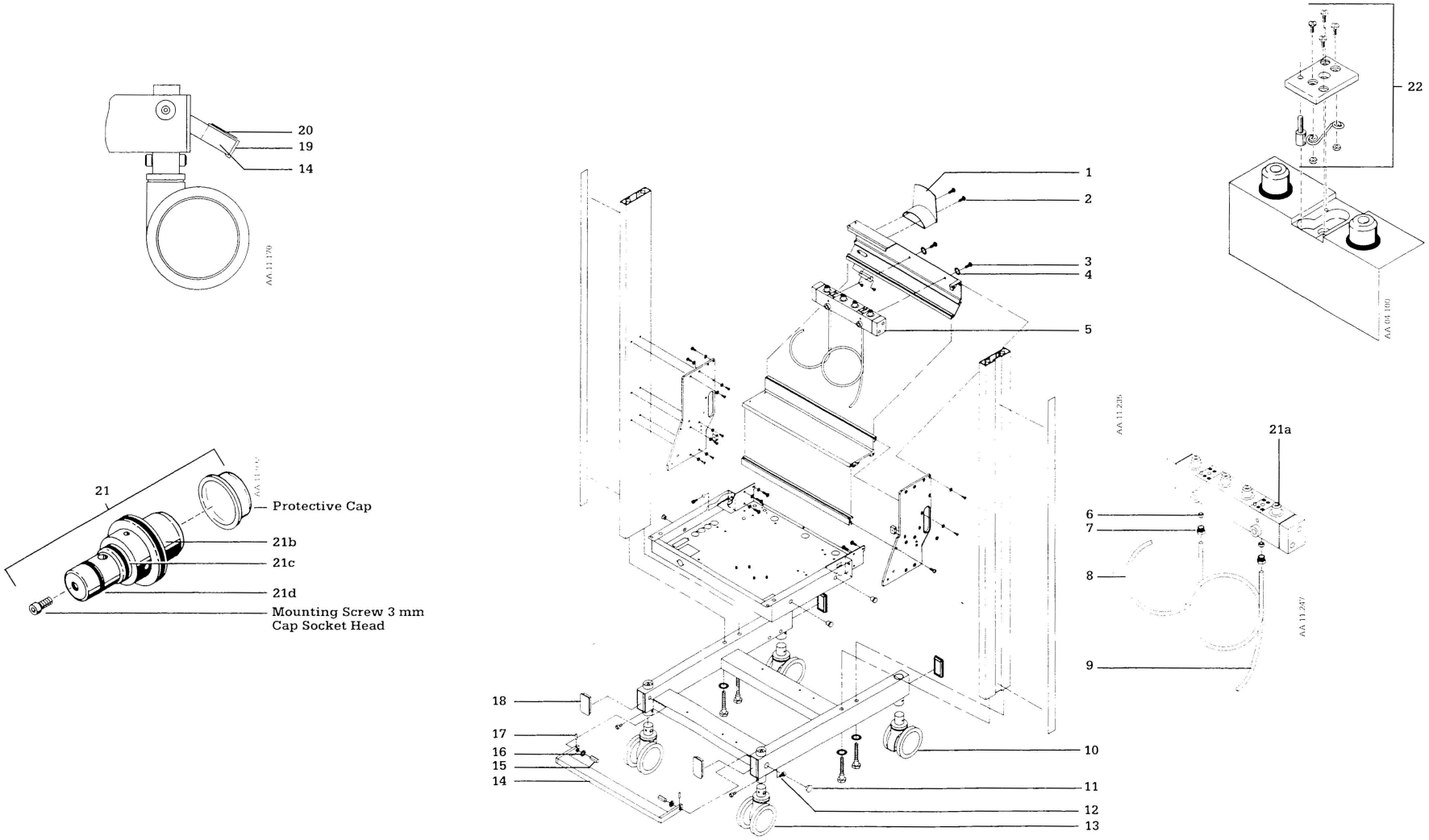

Figure 6-22 Front view

Figure 6-23 Vanity panel (France, Australia, Scandinavia, Germany and Switzerland only)

Note: No vanity panel is used on other 210 ISO models

Item	Description	Stock Number	
1.	Trim Strip Flex PVC w/ Clip (2)	0994-8307-010	
2.	Vanity Panel		
	410 Excel	Not Used	
	210 Excel	1002-4015-000	
	110 Excel	Not Used	
3.	Washer EXT LCK M4 (2)	9213-0540-003	
4.	Screw M4x6 Button Head SST (2)	9211-1040-067	
5.	Screw, M6x12 (2)	9211-1060-127	a b c
	Screw, M6x16 (2)	9211-0960-167	a b c

a Apply Loctite No. 222 or an approved equivalent, sparingly to threads (Stock No. 0220-5016-300)

b Two different screws were used. Please check screw size before ordering.

c Screw goes through lower drawer bracket into cross piece.

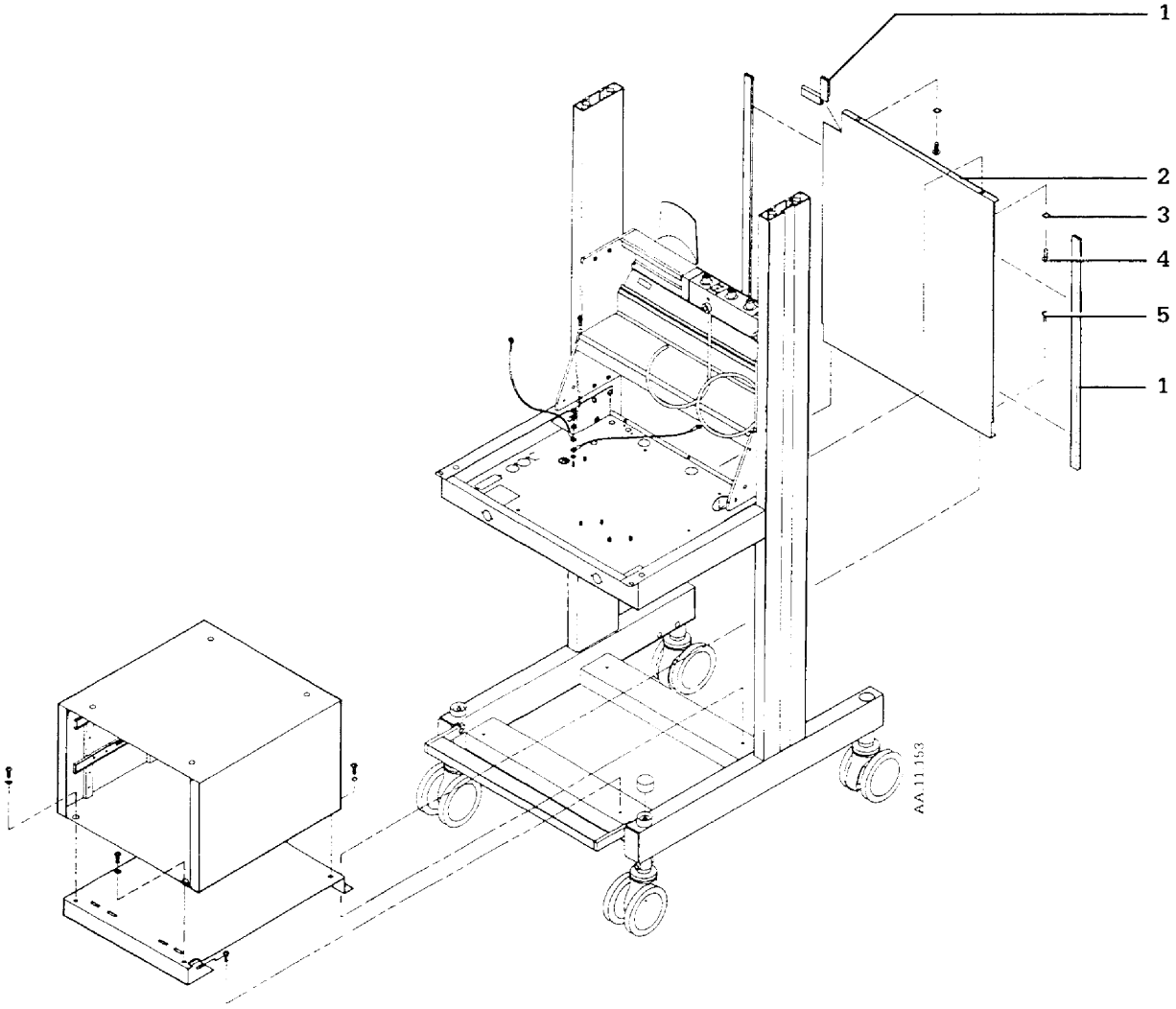

Figure 6-23 Vanity panel (France, Australia, Scandinavia, Germany and Switzerland only)

Figure 6-24 Front panels

Item	Description	Stock Number
1.	Flowmeter Shield	
	Model 110 ISO	1005-7904-000
	Model 210 w/ Air/N2O Selector Switch	1001-7951-000
	Model 210 w/ full mid shelf	1001-7952-000
	Model 210 w/o Air/N2O Selector Switch	1001-7953-000
	Model 410	1004-7902-000
2.	Retainer Flowmeter Cover	
	Excel w/ full mid shelf	1001-4092-000
	Excel with half mid shelf	1001-4096-000
3.	Screw, M4x12 Countersunk (2)	9211-0940-127
4.	Window Seals	
	Model 410	1004-4009-000
	Model 210	1002-4009-000
	Model 110	1005-4009-000
5.	Label Gauge O2	
	Label Gauge O2 Cyl/Pl Austria	1001-3816-000
	Label Gauge O2 Cyl/Pl Australia	1001-3976-000
	Label Gauge O2 Cyl/Pl Germany	1001-3794-000
	Label Gauge O2 Cyl/Pl France	1002-3913-000
	Label Gauge O2 Cyl/Pl Standard ISO	1001-3976-000
	Label Gauge O2 Cyl/Pl+Extra Cyl ISO	1001-3983-000
	Label Gauge O2 Pl Only Italy	1001-3994-000
	Label Gauge O2 Pl Only Spain	1001-3824-000
	Label Gauge O2 Cyl/Pl Scandinavia	1001-3857-000
	Label Gauge O2 Cyl/Pl Switzerland	1001-3802-000
6.	Label Gauge N2O	
	Label Gauge N2O Cyl/Pl Austria	1001-3817-000
	Label Gauge N2O Cyl/Pl Australia	1001-3942-000
	Label Gauge N2O Cyl/Pl Germany	1001-3795-000
	Label Gauge N2O Pl Only France	1002-3914-000
	Label Gauge N2O Cyl/Pl Standard ISO	1001-3942-000
	Label Gauge N2O Cyl/Pl+Extra Cyl ISO	1001-3940-000
	Label Gauge N2O Pl Only Italy	1001-3995-000
	Label Gauge N2O Pl Only Spain	1001-3825-000
	Label Gauge N2O Cyl/Pl Scandinavia	1001-3858-000
	Label Gauge N2O Cyl/Pl Switzerland	1001-3803-000
7.	Label Gauge Air (210 or 410 only)	
	Label Gauge Air Cyl/Pl Austria	1001-3818-000
	Label Gauge Air Cyl/Pl Australia	1001-3977-000
	Label Gauge Res O2 Cyl/Air Pl Germany	1001-3798-000
	Label Gauge Air Pl Only France	1002-3915-000
	Label Gauge Air Cyl/Pl Standard ISO	1001-3977-000
	Label Gauge Air Pl Only Italy	1001-3996-000
	Label Gauge Air Pl Only Spain	1001-3826-000
	Label Gauge Air Cyl/Pl Scandinavia	1001-3859-000
	Label Gauge Air Cyl/Pl Switzerland	1001-3804-000
	Label Gauge CO2 Cyl Only ISO	1001-3984-000
8.	Window Blank	
	Model 410	1004-3901-000
	Model 210	1002-3000-000
	Model 110	1005-3900-000
9.	Lower Window Retainer	
	Model 410	1004-4008-000
	Model 210	1002-4008-000
	Model 110	1005-4008-000
10.	Upper Window Retainer	
	Model 410	1004-4007-000
	Model 210	1002-4007-000
	Model 110	1005-4007-000

Item	Description	Stock Number
11.	Gauge Panel	
	Model 410	
	O2 Cyl/Pl+Cyl; N2O Cyl/Pl+Cyl; Air Cyl/Pl	1004-5902-000
	O2 Cyl/Pl+Cyl; N2O Cyl/Pl; CO2 Cyl; Air Cyl/Pl	1004-5902-000
	O2 Cyl/Pl+Cyl; N2O Cyl/Pl+Cyl; CO2 Cyl	1004-5903-000
	Model 210	
	O2 Cyl/Pl; N2O Cyl/Pl; Air Cyl/Pl or German	1002-5900-000
	O2 Cyl/Pl; N2O Cyl/Pl; CO2 Cyl	1002-5906-000
	O2 Cyl/Pl; N2O Cyl/Pl; O2 Cyl	1002-5905-000
	O2 Pl; N2O Pl; Air Pl (Spain, Italy)	1002-5904-000
	O2 Cyl/Pl; N2O Pl; Air Pl (France)	1002-5932-000
	Model 110	
	ISO, Italy, Spain (O2 Pl; N2O Pl)	1005-5907-000
12.	Washer EXT LCK M4 (2)	9213-0540-003
13.	Screw M4x10 Button Head Socket (2)	9211-1040-109

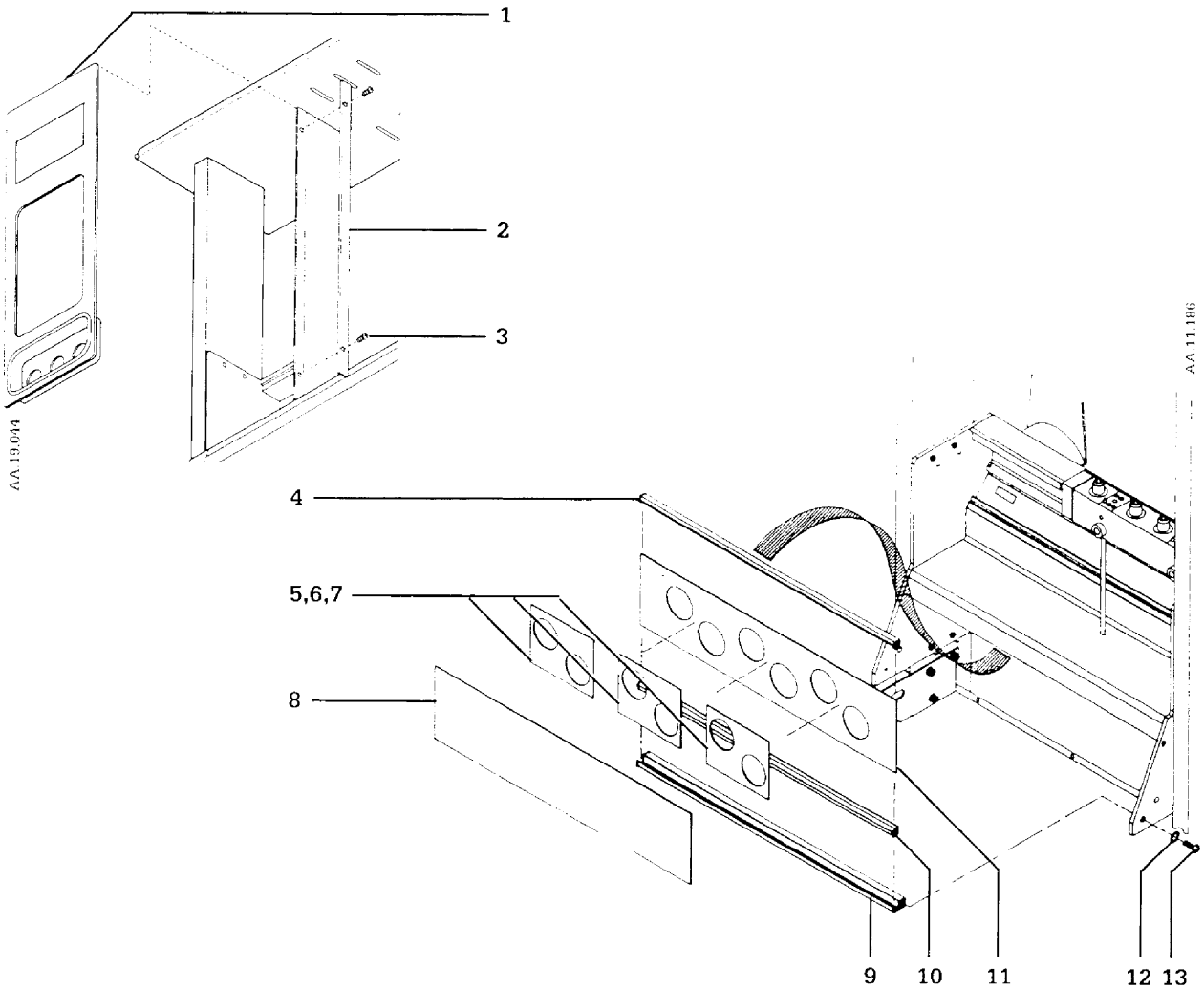

Figure 6-24 Front panels

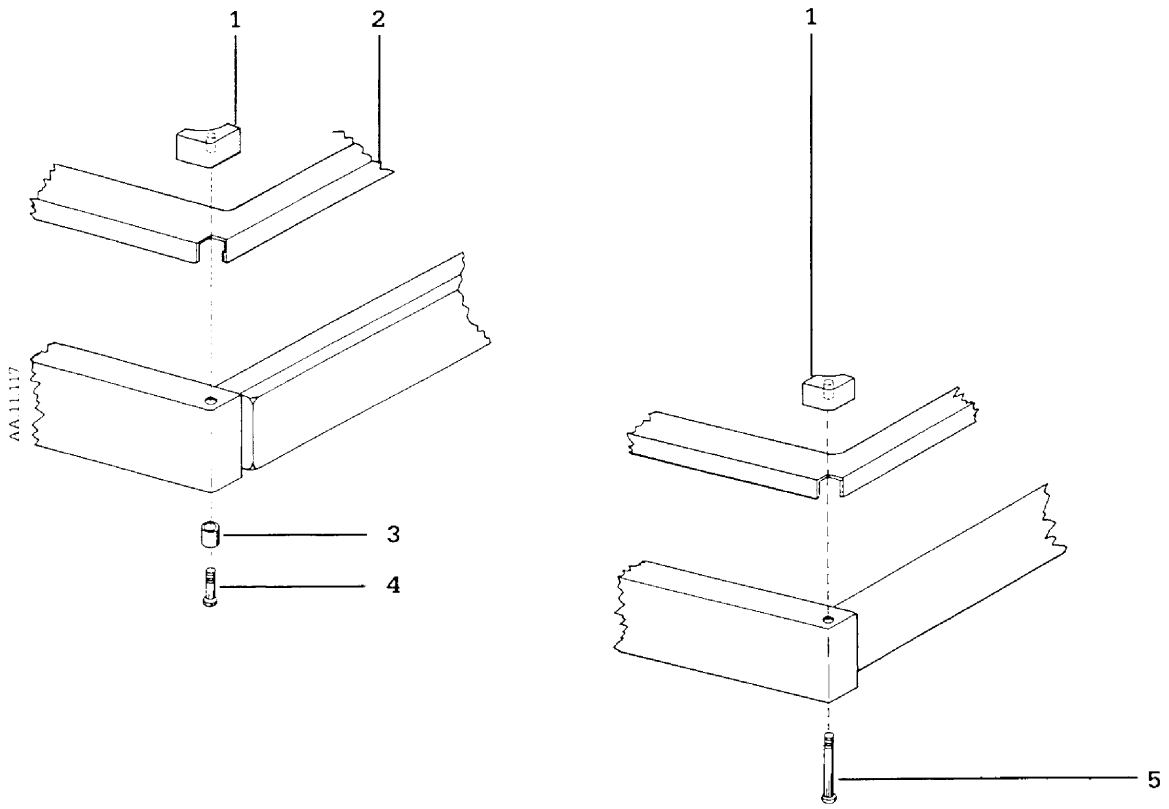

Figure 6-25 Tray top

Item	Description	Stock Number	
1.	Retainer tray (2)	1001-4040-000	
2.	Tray Top		
	Model 410	1004-4013-000	
	Model 210	1002-4013-000	
	Model 110	1005-4013-000	
3.	Spacer 8.4mm ID 11.1mm OD (2)	1001-5932-000	
4.	Screw, M6x8 (2)	9211-1060-085	Use w/ spacer
5.	Bolt Retainer M6x63 (2)	1001-4041-000	Use w/o spacer

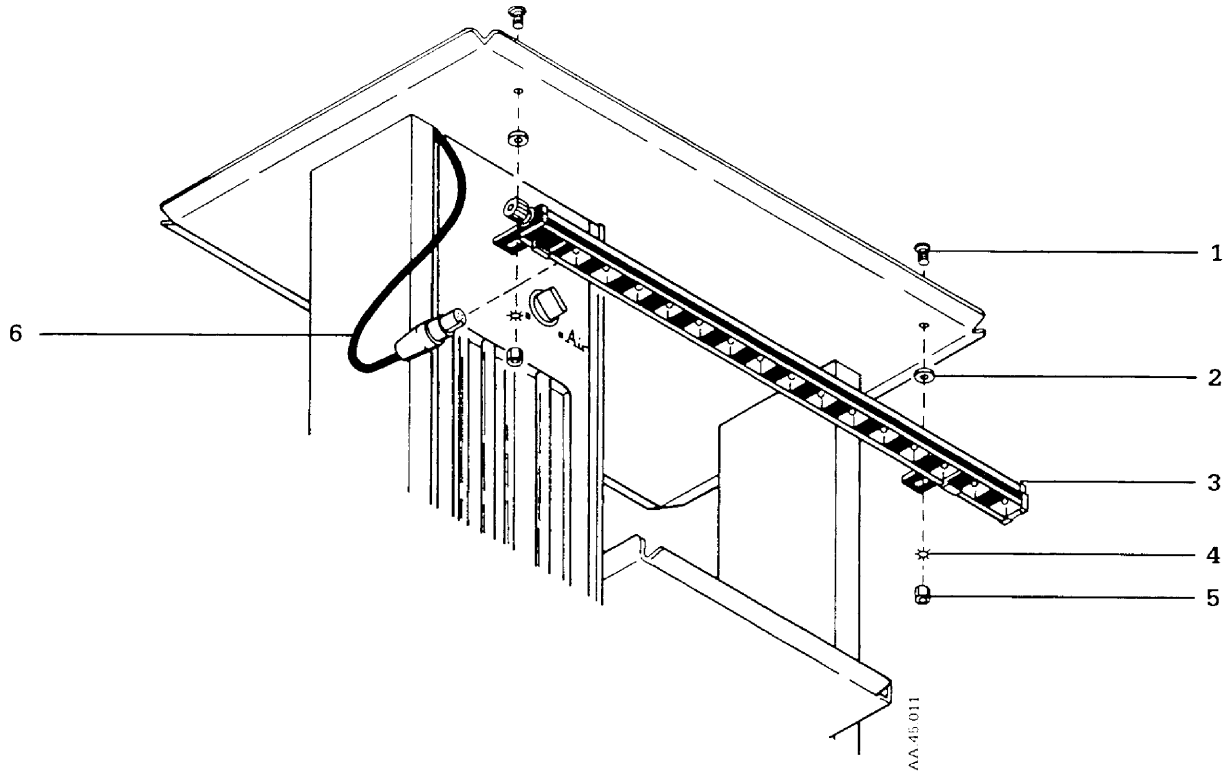

Figure 6-26 Light packages

Item	Description	Stock Number	
1.	Screw, M4x12 Countersunk (2)	9211-0940-127	
2.	Washer 0.199ID x 0.562OD (2)	0402-1042-500	
3.	Light Package (Light Strip Only)		
	Models 410 & 210 w/ new style shelves	1001-3974-000	
	Models 110 & 210 w/ old style shelves	1001-3949-000	
4.	Washer External Lock M4 (2)	9213-0540-003	
5.	Nut M4x0.7 Thick (2)	9212-0140-003	
6.	Cable Light Package 914 mm Molded	1001-3897-000	a

Not Shown	Stock Number
Light Kit 210 Excels w/ new shelves (Figure 6-27)	1002-8065-000
Light Kit All 110 Excels and 210 Excels w/ old shelves (Figure 6-28)	1002-8955-000
Light Kit All 410 Excels	1004-8023-000
Light Pkg Installation Instructions	1001-0811-000

a The cable is already installed on 210 Excels with the new style shelves. This cable is not included with kit 1002-8065-000. All other light kits include the cable.

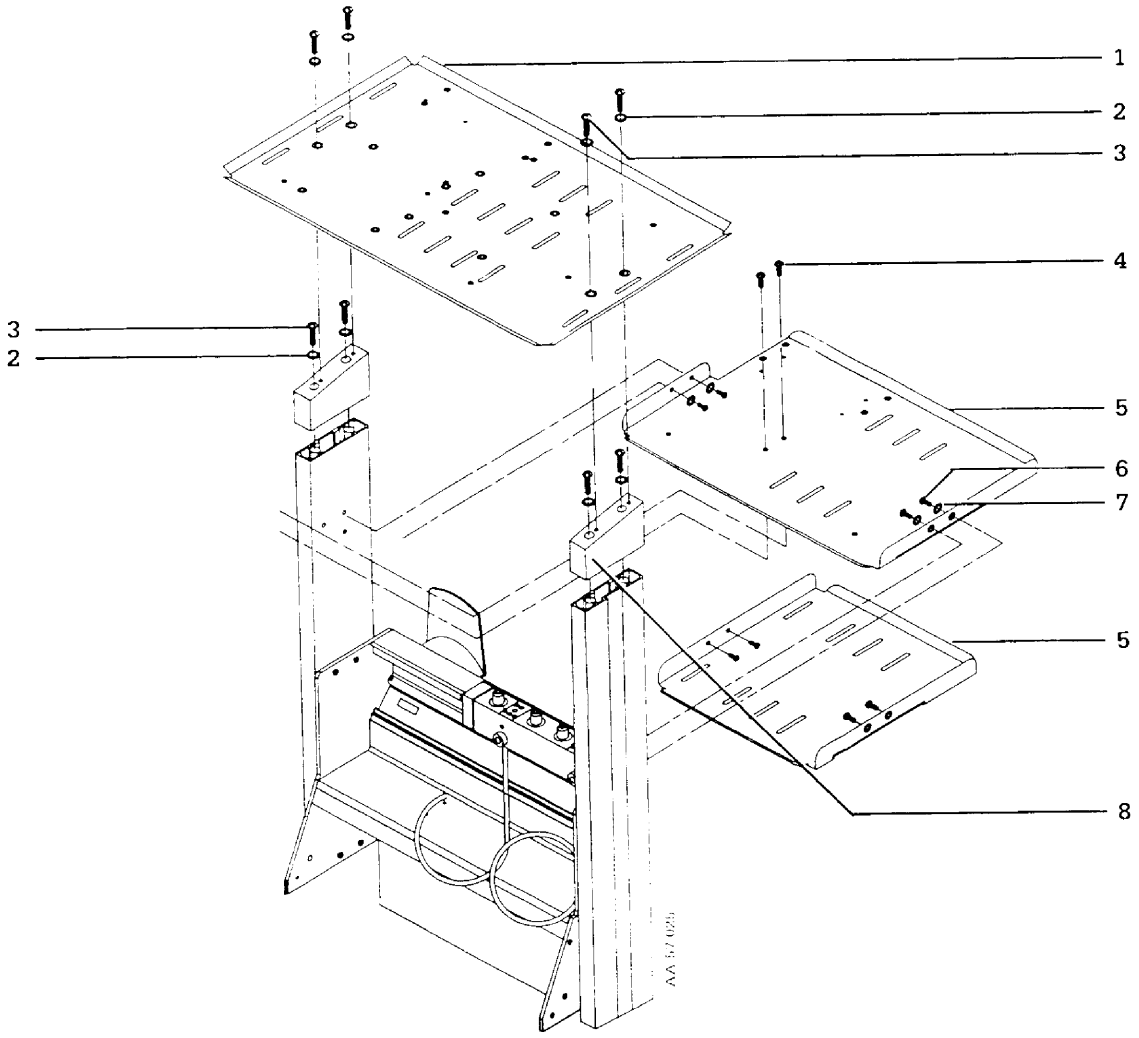

Figure 6-27 Shelves style 2

Item	Description	Stock Number	
1.	Shelf Top Excel 410	1004-5907-000	a
	Shelf Top Excel 210	1002-5914-000	a
	Shelf Top Excel 110	1005-5912-000	a
2.	Washer Lock External M8 SST 316 (8)	0144-1118-131	
3.	Screw M8x25 Button Head (8)	0144-2440-822	
4.	Screw, M4x12 Countersunk Socket Head	9211-0940-127	
5.	Shelf Mid Excel 410	1004-5906-000	
	Shelf Mid ISO Excel 110 & 210 (Half Width)	1001-5860-000	
	Shelf Mid Australian Excel 210 (Full Width)	1002-5915-000	
6.	Screw M6x12 Button Head Black (4)	9211-1060-127	
7.	Washer External Lock M6 (4)	9213-0560-003	
8.	Spacer 10° Top Shelf (2)	1001-5858-000	
	Not Shown	**Stock Number**	
	Spacer Shelf Straight (2)	1001-5859-000	b

a To install the new style top shelf on an older Excel, order items 1, 2 and 3.

b Alternative to 10° spacer.

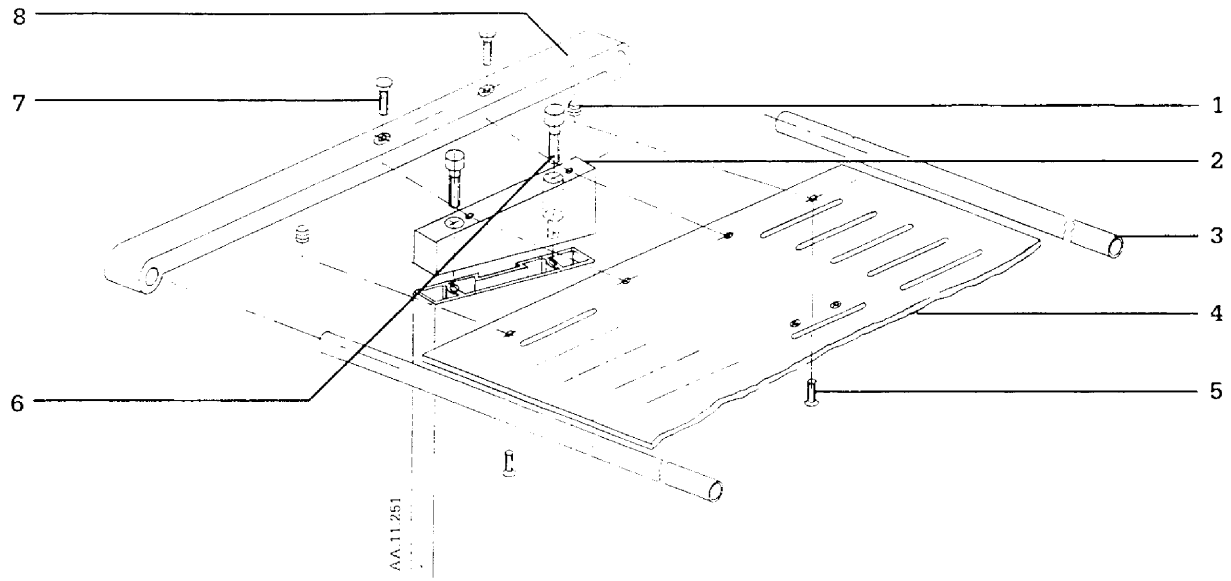

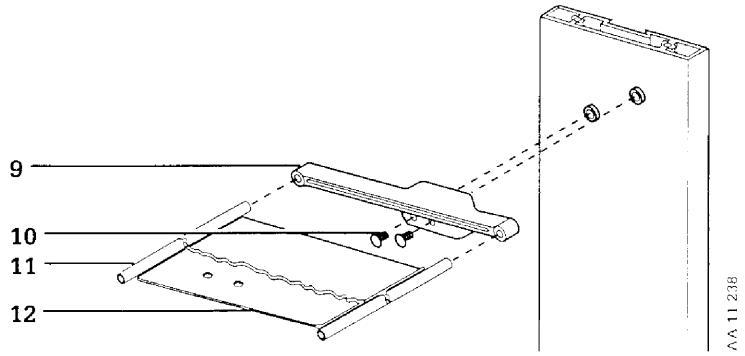

Figure 6-28 Shelves style 1

Item	Description	Stock Number
1.	Insert Multisert (4)	1001-3054-000
2.	Spacer 10° Top Shelf	1001-4101-000
3.	Tube Shelf Top (2)	
	Model 110	1005-4004-000
	Model 210	1002-4004-000
	Model 410	1004-4004-000
4.	Shelf Top	
	Model 110	1005-4003-000
	Model 210	1002-4003-000
	Model 410	1004-4003-000
5.	Screw M4x10 Countersunk(2)	9211-0240-102
6.	Screw M8x25 Cap Head	9211-0680-255
7.	Screw M8x35 Countersunk (4)	9211-0980-357
8.	Support Top Shelf (2)	1001-4019-000
9.	Support Shelf Monitor (2)	1001-4038-000
10.	Screw M6x16 Button Head (4)	0144-2436-100
11.	Tube Monitor Shelf (2)	
	Model 210	1001-4049-000
	Model 410	1004-4019-000
12.	Shelf Monitor	
	Model 210	1001-4048-000
	Model 410	1004-4018-000

Note: See style 2 figure for information on replacing style 1 shelves with style 2.

Figure 6-29 Cabinet assembly 2 small, 1 large drawer (Stock Number 0236-0323-800)

Item	Description	Stock Number	
1.	Lock Cam 180DEG	0203-2499-300	
2.	Bar Latching LWR	0236-0072-500	
3.	Spacer .219OD .032 (3)	0202-0004-500	
4.	Screw 6-32 x 1 (3)	0144-2124-216	
5.	Spring Compression. .281ID	0203-3301-300	
6.	Slide Drawer 13 In. (6)	0203-2498-300	
7.	Drawer Small w/o Rails (2)	0234-1032-710	a
8.	Pad Drawer Large (3)	0236-0166-500	
9.	Drawer Large w/o Rails	0234-1033-710	a
10.	Nut, Nyloc M5 (4)	9212-0350-006	b
11.	Washer, M5 (4)	9213-0150-006	b
12.	Screw, M5x10 Button Head Socket (4)	9211-1050-105	b
13.	Cabinet Lower	0234-1034-710	c
14.	Screw #6 x 3/8L Type AB Hex (18)	0400-3142-300	
	Not Shown	**Stock Number**	
	Bracket 3 Drawer Cabinet Bottom Mount	1005-5900-000	b

a To replace a drawer, order the drawer, two drawer slides and the following hardware: (6) Washer, Locking Ext. M3 9213-0530-003; (6) Nut KEP M3 PL ST EXT LCK 0144-3717-302; (6) Screw M3x6 Button Head 9211-1030-055

b Items that are not included with Stock No. 0236-0323-800

c The drawer slides and the hardware to attach them to the cabinet must be ordered separately.

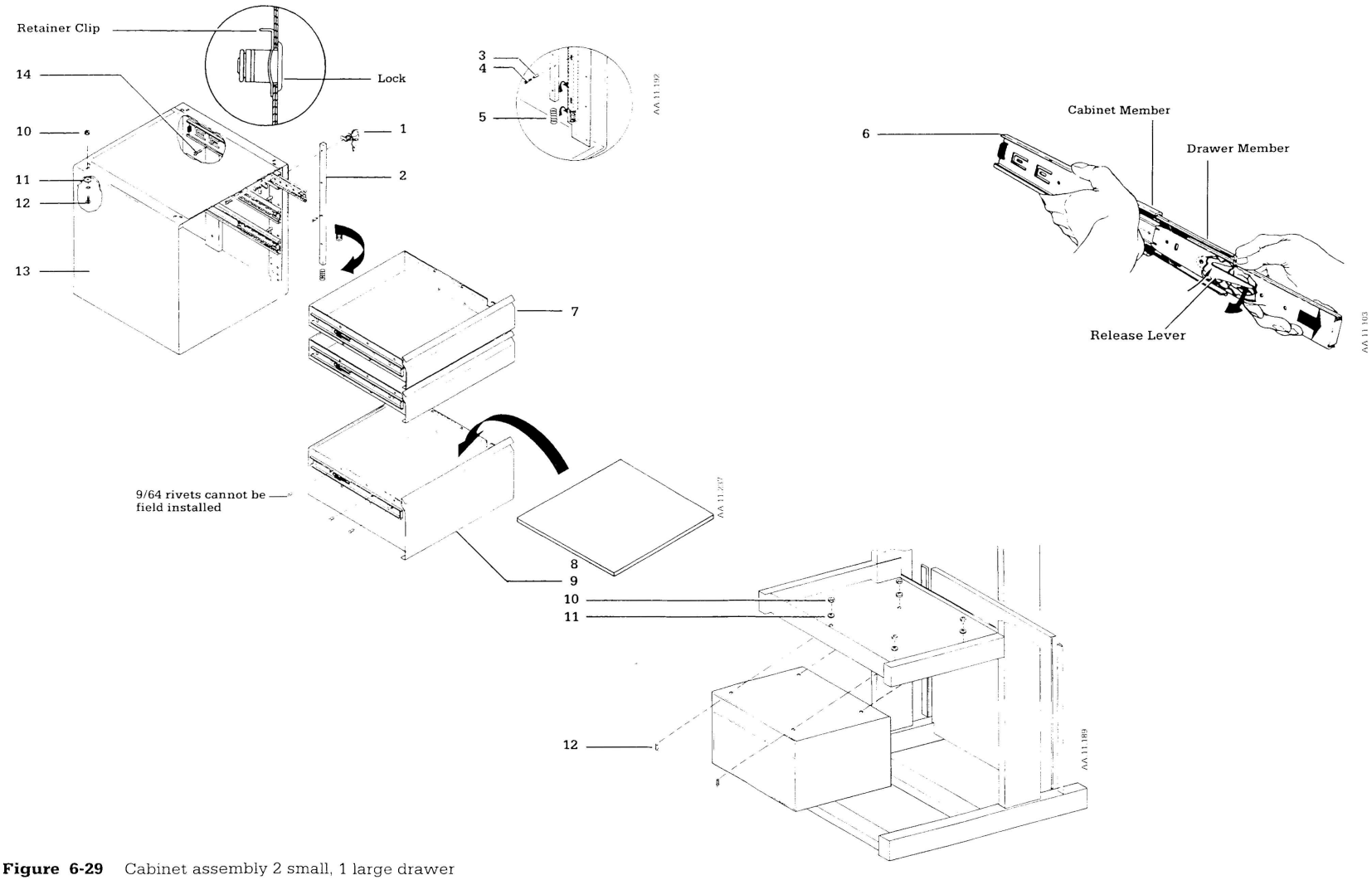

Figure 6-29 Cabinet assembly 2 small, 1 large drawer

Figure 6-30 Standard cabinet w/ two, four inch drawers (Stock Number 1001-8925-000)

Item	Description	Stock Number	
1.	Screw #6 x 3/8L Type AB Hex (12)	0400-3142-300	
2.	Slide Drawer 13 In. (4)	0203-2498-300	
3.	Cabinet Subassembly Lower Cabinet	1001-7926-000	a
4.	Screw M6x12 Button Head Black (4) or	9211-1060-127	
	Screw M6x16 Button Head Black (4) or	9211-0960-167	
	Screws M6x10, Button Head (4)	9211-1060-103	
5.	Washer External Lock M6 (4)	9213-0560-003	
6.	Drawer Lower Cabinet w/o Rails (2)	1001-7927-000	b
7.	Bracket 2 Drawer Cabinet Mounting	1001-5886-000	
8.	Cap Base	1001-4013-000	
	Not Shown		
	Pad Drawer Lower Cabinet (2)	1001-3830-000	

a Slides (2) and related hardware (item 1) not included. This is the same cabinet and drawers used in the add on drawer kits.

b To replace a drawer, order the drawer, two drawer slides and the following hardware: (6) Washer, Locking Ext. M3 9213-0530-003; (6) Nut KEP M3 PL ST EXT LCK 0144-3717-302; (6) Screw M3x6 Button Head 9211-1030-055

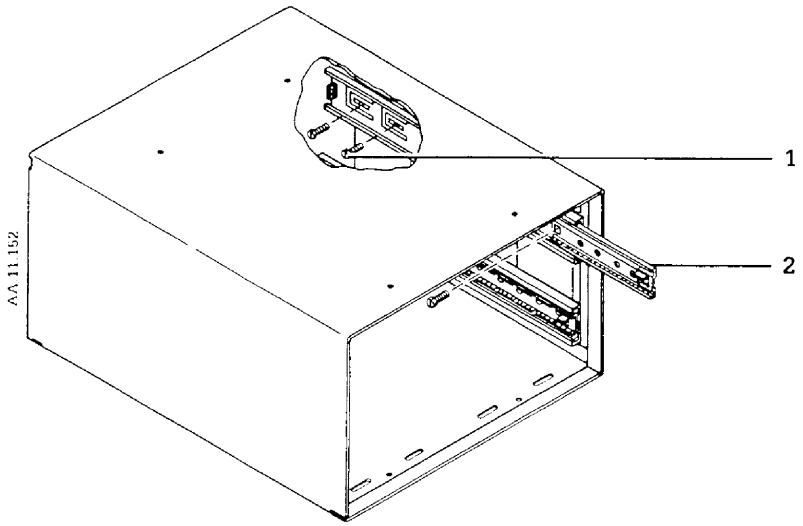

Attaching Slides to Cabinet

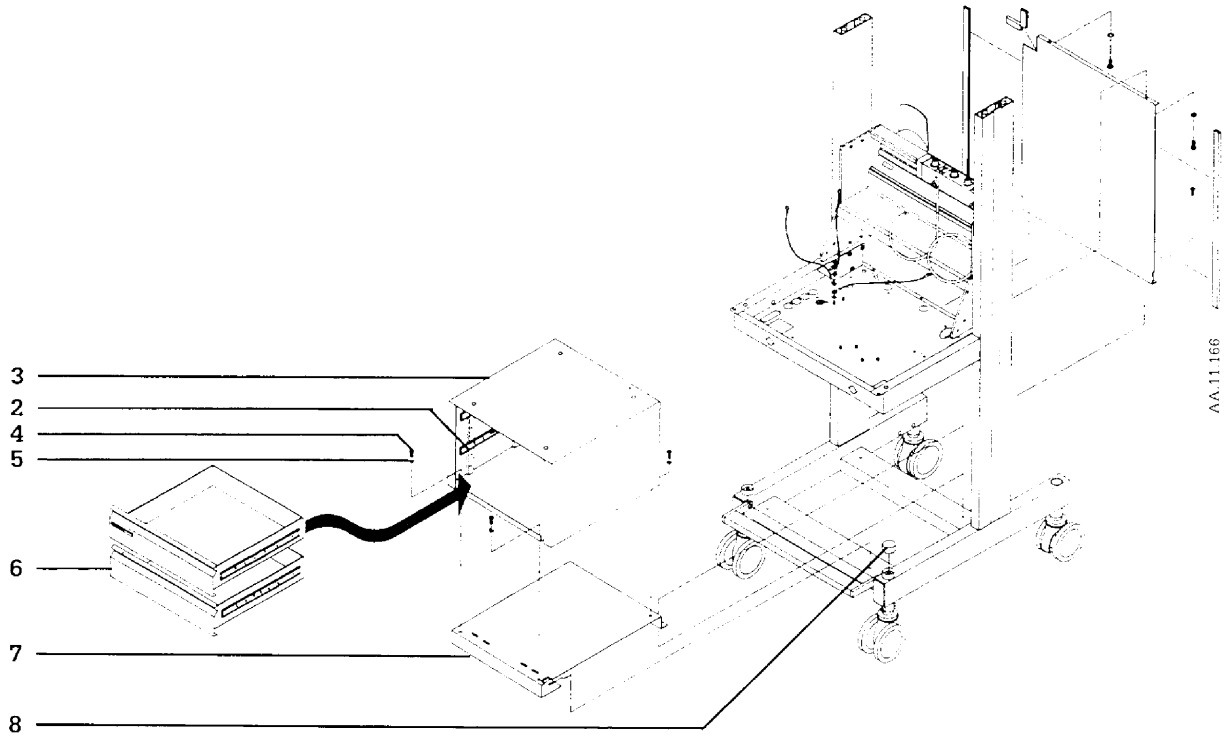

Figure 6-30 Standard cabinet w/ two, four inch drawers (Stock Number 1001-8925-000)

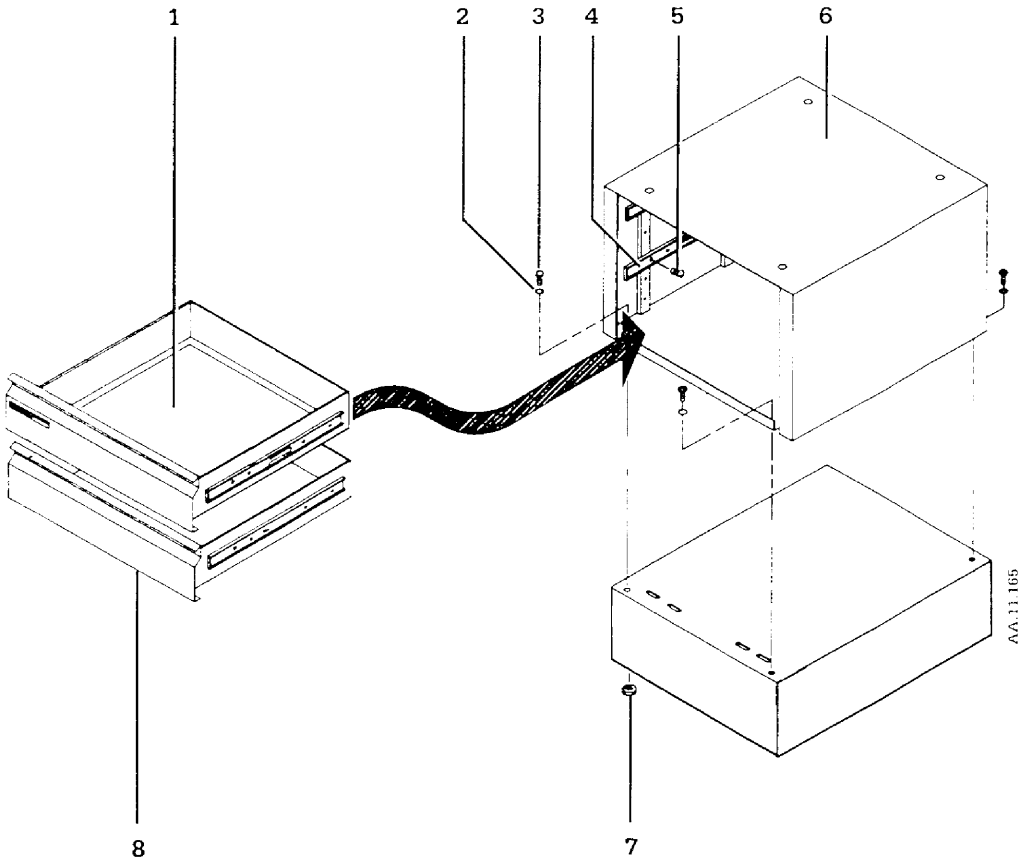

Figure 6-31 Add on cabinet kit w/ two four inch drawers (Stock Number 1001-8925-000)

Item	Description	Stock Number	
1.	Pad Drawer Lower Cabinet (2)	1001-3830-000	
2.	Washer External Lock M6 (4)	9213-0560-003	
3.	Screws M6x10, Button Head (4)	9211-1060-103	
4.	Slide Drawer 13 In. (4)	0203-2498-300	
5.	Screw #6 x 3/8L Type AB Hex (12)	0400-3142-300	
6.	Cabinet Assembly Lower Cabinet	1001-7926-000	a
7.	Nut M6 ST ST (4)	9212-0160-003	
8.	Drawer Lower Cabinet w/o Rails (2)	1001-7927-000	b

Note: Will not fit if the RGM is mounted on the drawers.

a Slides (4) and related hardware (item 5) not included. This is the same cabinet and drawers used in the standard cabinet and the single eight inch add on drawer kits.

b To replace a drawer, order the drawer, two drawer slides and the following hardware: (6) Washer, Locking Ext. M3 9213-0530-003; (6) Nut KEP M3 PL ST EXT LCK 0144-3717-302; (6) Screw M3x6 Button Head 9211-1030-055

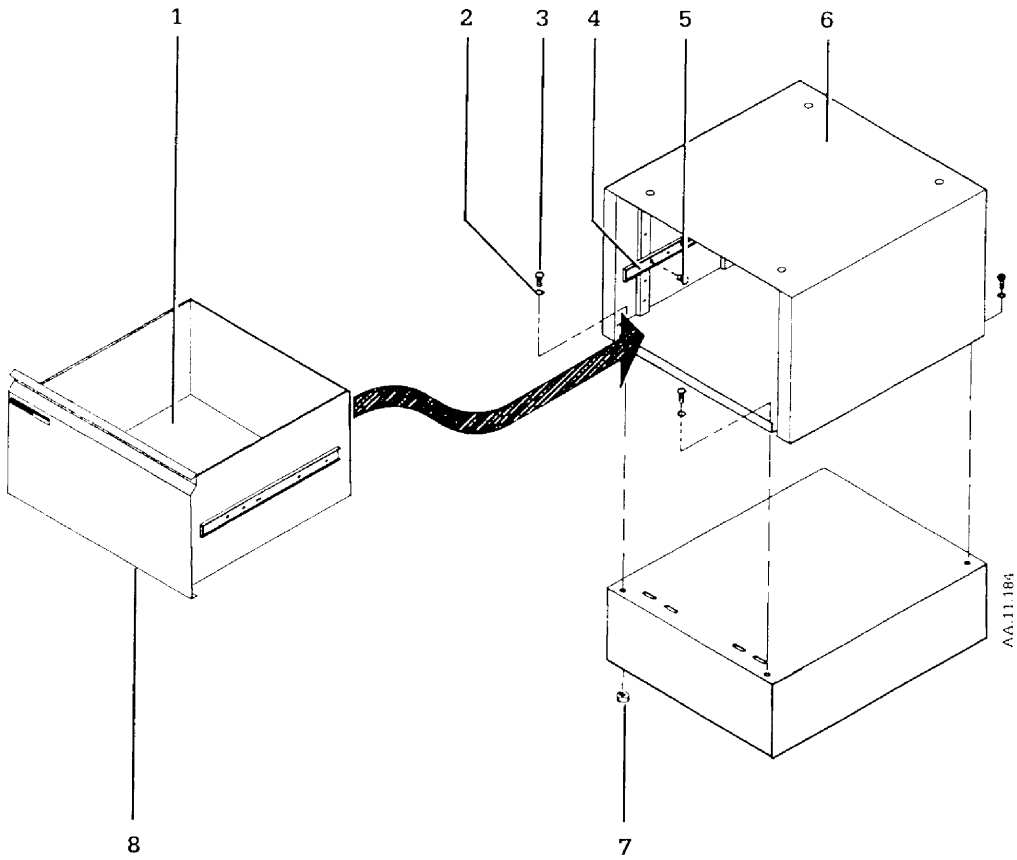

Figure 6-32 Add on single eight inch drawer cabinet kit (Stock Number 1001-8984-000)

Item	Description	Stock Number	
1.	Pad Drawer Lower Cabinet (2)	1001-3830-000	
2.	Washer External Lock M6 (4)	9213-0560-003	
3.	Screws M6x10, Button Head (4)	9211-1060-103	
4.	Slide Drawer 13 In. (4)	0203-2498-300	
5.	Screw #6 x 3/8L Type AB Hex (12)	0400-3142-300	
6.	Cabinet Assembly Lower Cabinet	1001-7926-000	a
7.	Nut M6 ST ST (4)	9212-0160-003	
8.	Drawer Assembly 200mm w/o Rails	1001-7966-000	b

Note: Will not fit if the RGM is mounted on the drawers.

a Slides (4) and related hardware (item 5) not included. This is the same cabinet and drawers used in the standard cabinet and the single eight inch add on drawer kits.

b To replace a drawer, order the drawer, two drawer slides and the following hardware: (6) Washer, Locking Ext. M3 9213-0530-003; (6) Nut KEP M3 PL ST EXT LCK 0144-3717-302; (6) Screw M3x6 Button Head 9211-1030-055

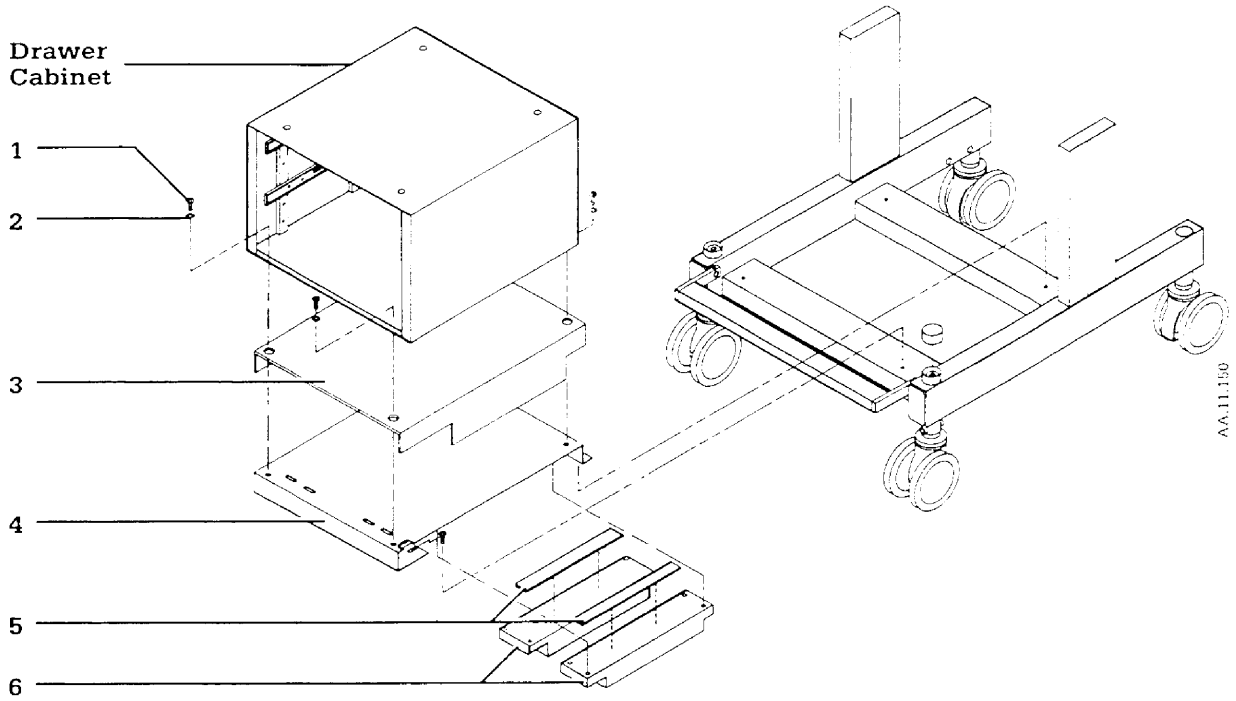

Figure 6-33 Weight kits (for two drawer cabinets Stock Number 1001-8980-000; for three drawer cabinets, Stock Number 1001-8981-000)[a]

Item	Description	Stock Number	
1.	Screw M6x16 Button Head (4)	0144-2436-100	
2.	Washer 0.968OD 0.265 ID (4)	0402-1107-500	
3.	Vanity Cover		
	2 Drawer Cabinet	1001-5766-000	
	3 Drawer Cabinet	1001-5751-000	
4.	Bracket Drawer Cabinet Mounting		
	Bracket 2 Drawer Cabinet Mounting	1001-5886-000	
	Bracket 3 Drawer Cab Btm Mounting	1005-5900-000	
5.	Tape Double Face	0999-1114-010	[b] Spcfy Length
6.	Weight Excel Base (2)	1001-5752-000	[b]

Not Shown	Stock Number	
Installation Instructions, Weight Kits	1001-0836-000	
Nut M6 ST ST (4)	9212-0160-003	[c]
Additional Weight Kit (use with either kit; recommended if Arkive also installed)	1301-8009-000	

[a] Weight kits allow field installation on all model Excels. Weights are already installed on all new production Excel 110s.

[b] Included with Additional Weight Kit.

[c] Used to mount weights on three drawer cabinets.

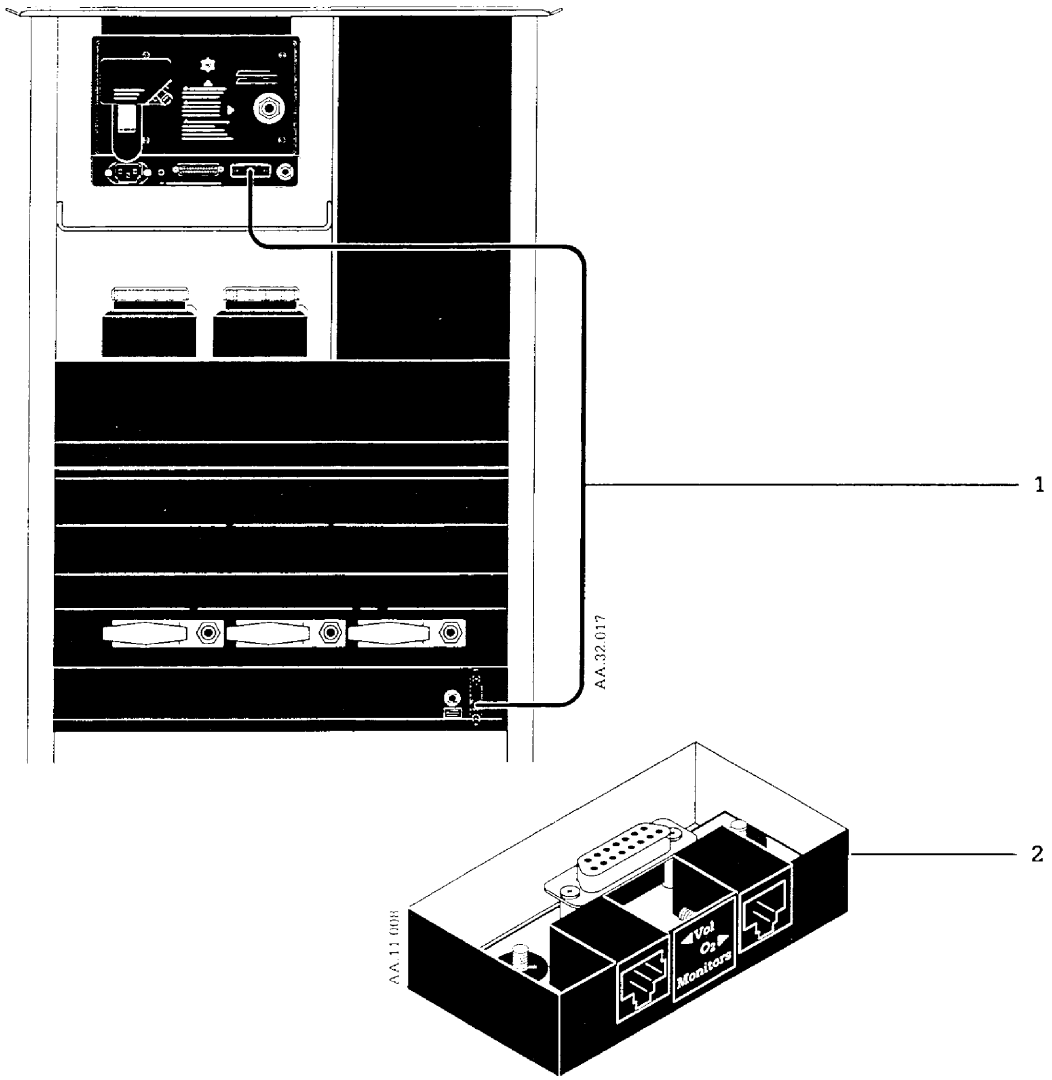

Figure 6-34 7800 patient interface and cabling (all units except German)

Item	Description	Stock Number
1.	Excel/7800 Interface Cable	1001-7931-000
2.	Patient Interface Assembly	See 7800 Ventilator Service Manual

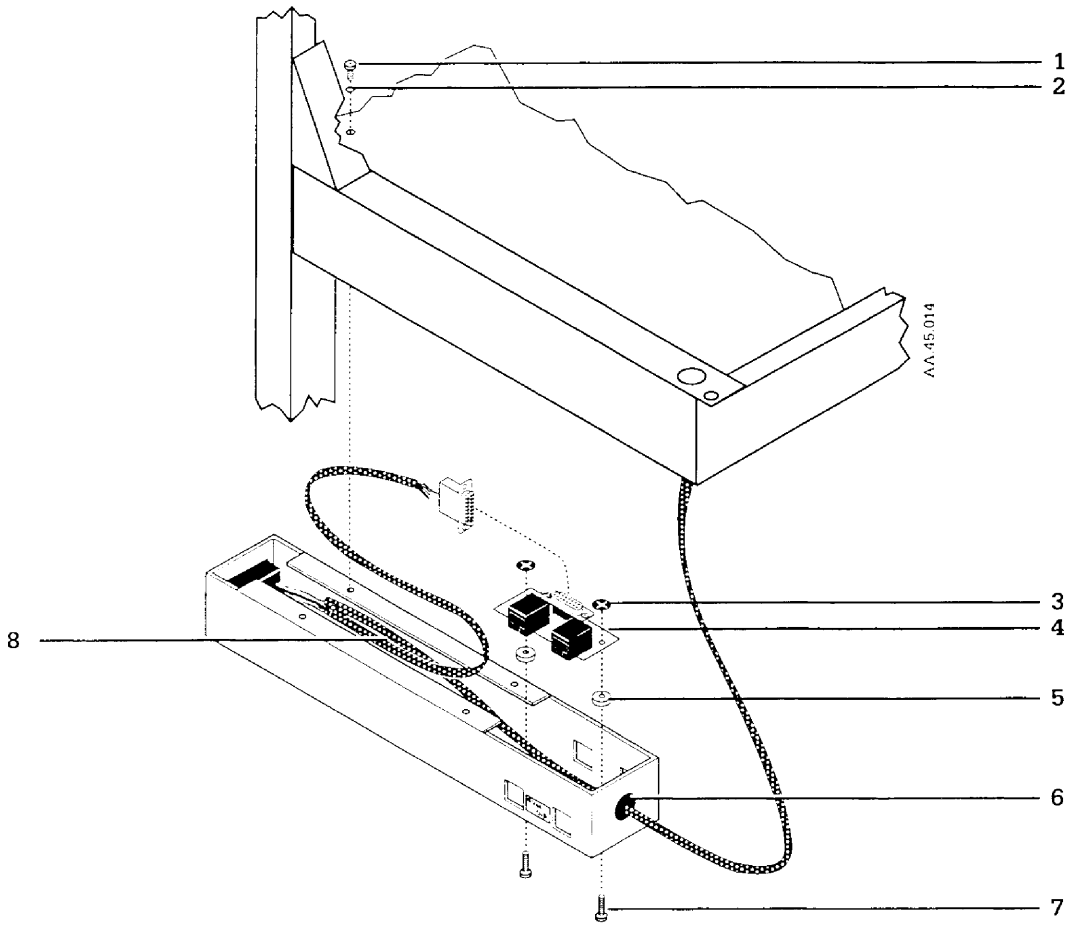

Figure 6-35 German 7800 patient interface and cabling

Item	Description	Stock Number
1.	Screw M4x6 Button Head (4)	9211-1040-067
2.	Washer	
3.	Retainer Push-on 3.6 mm ID (2)	1001-3845-000
4.	PC Sensor Board	1001-7929-000
5.	Spacer 5mm Lg 4.5 mm ID (2)	1001-3844-000
6.	Bushing	1001-3606-000
7.	Screw M4x16 Pan Head Phillips (2)	9211-0440-163
8.	Harness Subassembly Internal	1001-7930-000

Not Shown	Stock Number
Excel/7800 Ventilator Interface Cable	1001-7931-000

6.4 Accessories

⚠**CAUTION:** This section covers accessories for all IEC models. Check that an accessory has local regulatory approval before ordering. Also verify that the fittings are compatible with local standards.

A. Absorber Mounts

Figure 6-36 Absorber post assembly GMS Absorber styles 1 and 2

Item	Description	Stock Number	
1.	Screw, M8x16 Cap Head Socket (2)	9211-0680-165	a
2.	Washer, M8	9213-0180-006	
3.	Stop Brake Pedal New Base	1001-4238-000	
4.	Boss Absorber Post Lower	1001-5736-000	
5.	O-Ring 1.125ID 1.375OD(3)	0210-0602-000	
6.	Cover Absorber Post Break	1001-5735-000	
7.	Spring 30.18ID 2.51	1001-3717-000	
8.	Bushing Absorber Post Delrin (2)	0209-0203-500	
9.	Post Slotted Absorber Arm	0236-0595-500	
10.	Label Absorber Arm Assembly	1010-3082-000	
11.	Mount, Absorber Post Top	1001-4034-000	
12.	Complete Arm 2 Pos Absorber Style 1	DISCONTINUED	b
	Complete Arm Absorber Style 2	1010-8018-000	b
	Arm Assembly Breakdown		
13.	Cap, Absorber Arm End Machined	1400-5006-000	
14.	Pin Absorber Arm Locking	0236-0415-500	a
15.	Retainer Absorber Arm	0236-0416-500	
16.	Screw 10-32x3/8 Button Head	0400-1077-300	a
17.	Strap Absorber Locking	0234-0166-500	
18.	Bushing	0209-0204-500	
19.	O-Ring 1-3/8ID 1-1/2OD	0210-0513-300	
20.	Cap, Absorber Arm End	0211-1545-300	
21.	Plug Button 34.4 to 35.5 (2)	1001-3738-000	
22.	Spring, Comp.	0203-3507-300	
23.	Set screw (3)	0141-4518-105	

a Apply Loctite No.242 or an approved equivalent, sparingly to threads (Stock No. 0220-5016-300)

b The style 1 absorber mounting pin only fits the style 1 arm. The style 2 absorber mounting pin (supplied with the new absorbers) fits the style 2 arm or the style 1 arm (adapter required; see figure 6-37).

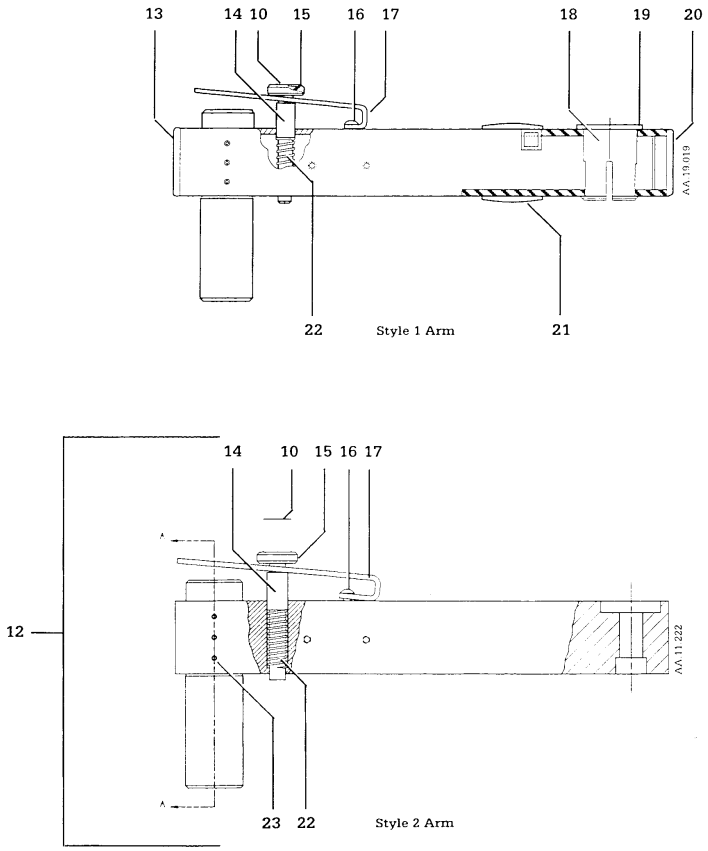

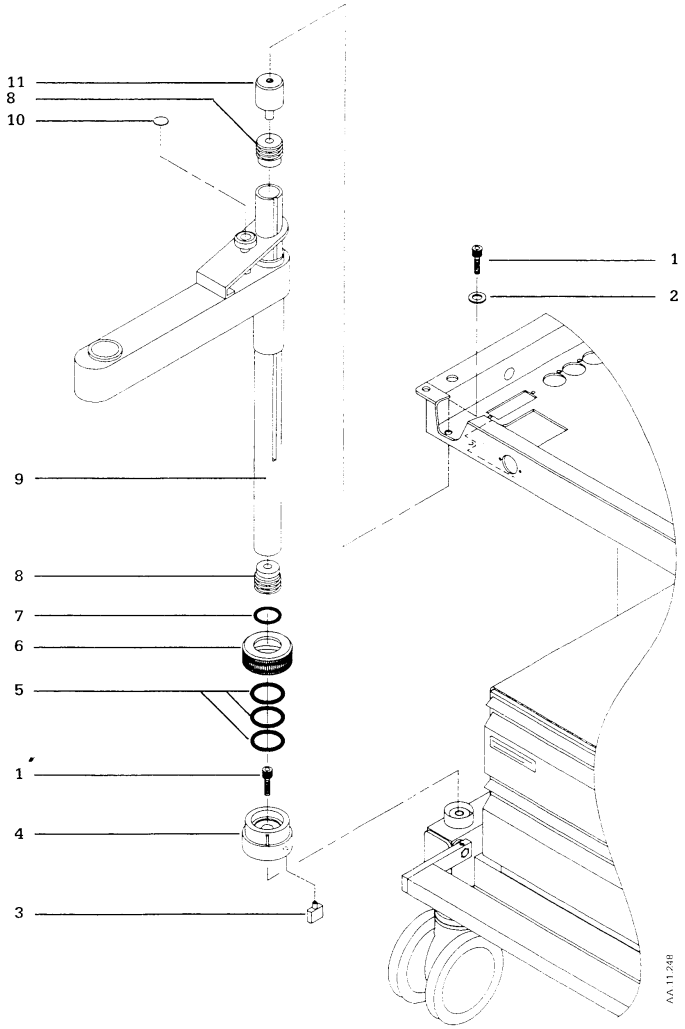

Figure 6-36 Absorber post assembly GMS Absorber styles 1 and 2

Figure 6-37 GMS Absorber mounting pins

Style 1 Absorber Mounting Pin (0216-6764-870)

Item	Description	Stock Number
1.	Pin GMS Absorber Mounting Style 1	0236-0459-500
2.	Washer 1.5OD 0.75ID 0.12THK	0202-0094-300
3.	Bushing GMS Absorber Mounting Pin (2)	0209-0209-500
4.	Washer Internal Lock M16 SST	0144-1126-131
5.	Nut Jam 9/16 -18 0.187 T	0402-1544-535

Style 2 Absorber Mounting Pin (Included w/ Absorber)

Item	Description	Stock Number	
1.	Washer 1.5OD 0.75ID 0.12 Thick	0202-0094-300	a
2.	Pin GMS Absorber Mounting Style 2	1400-7002-000	a
3.	Washer 25.78ID	0402-1038-500	a
4.	Mounting Adapter	1400-5019-000	b
5.	O-Ring	0210-0513-300	b
6.	Washer 19.05ID	0402-1037-500	a
7.	Knob	0236-0513-549	a

	Non GMS Absorber Mounting Pins	Stock Number
1.	Absorber Pin Non GMS (style 1 arm)	1001-7092-000
2.	Absorber Pin Non GMS (style 2 arm)	1001-8986-000

Not Shown	Stock Number
Style 1 Pin Installation Instructions	0176-1662-000

a Included with style 2 mounting pin assembly, Stock No. 1010-8074-000. These parts are automatically shipped to the customer with the style 2 absorber.

b Included in mounting pin adapter kit Stock No. 1400-8008-000.

Note: Mounting pin styles are not interchangeable. Absorbers manufactured for style 1 mounting pins will not fit on style 2 and vice versa. All Absorbers requiring style 2 are shipped with style 2 mounting pins. To install a style 2 pin on the older style absorber mounting arm, also order the mounting adapter and o-ring (items 4 and 5) or the complete mounting pin adapter kit (Stock No. 1400-8008-000).

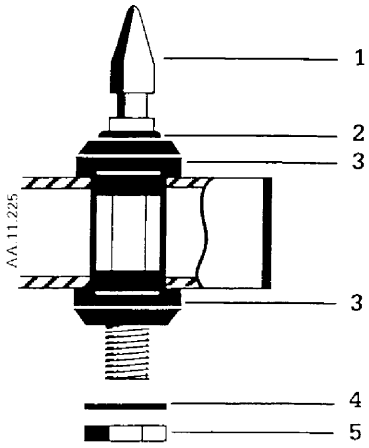

GMS Style 1 Arm

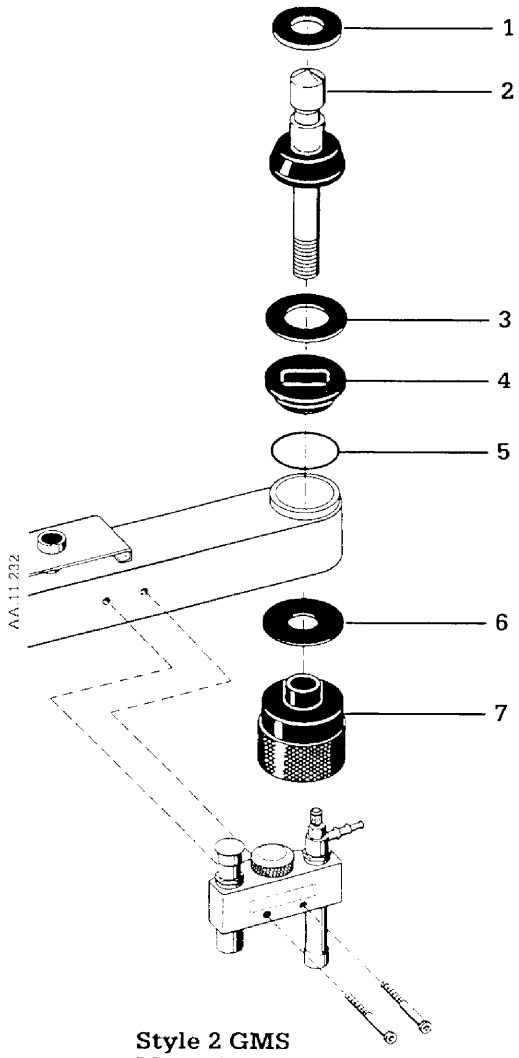

Style 2 GMS Mounting Pin Adapted to Style 1 Arm

Non-GMS Style 1 Arm

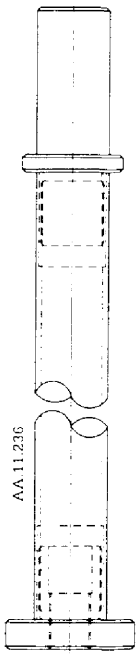

Non-GMS Style 2 Arm

Figure 6-37 GMS Absorber mounting pins

B. Bain Circuit Adapter & 6000 Monitor Mounting

Figure 6-38 Bain circuit adapter & 6000 monitor mounting kit (Stock Number 1010-8023-000)

Item	Description	Stock Number
1.	Stem Bain Circuit Adapter & 6000 Monitor	1010-5030-000
2.	Screw 10-32 x 1 (2)	0144-2131-920
3.	Clamp Post Bracket Bain Circuit	1010-5028-000
4.	Knob CR-2-ST (2)	1010-3046-000
5.	Body Post Bracket Bain Circuit	1010-5031-000
6.	Post Bain Circuit Adapter & 6000 Monitor	1010-5029-000

	Not Shown	Stock Number
	Bain Circuit Adapter Installation Instructions	1010-0050-000

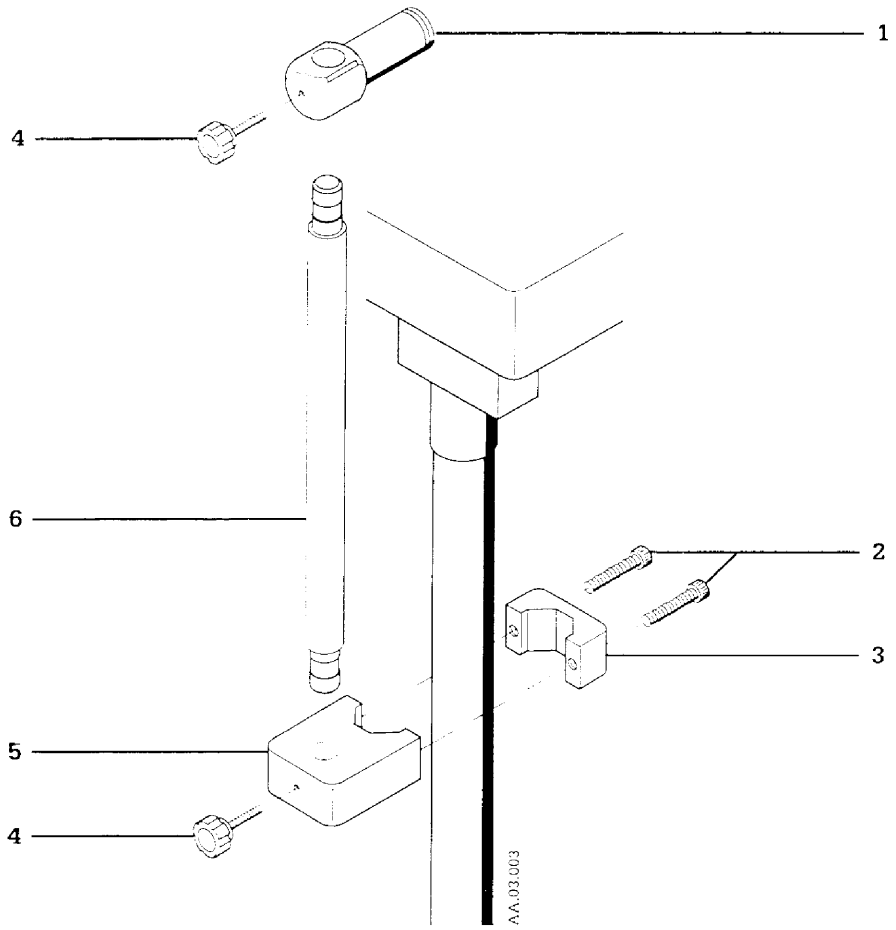

Figure 6-38 Bain circuit adapter & 6000 monitor mounting kit (Stock Number 1010-8023-000)

C. Cable Management Arm

Figure 6-39 Cable management arm (Stock Number 1602-8000-000)

Item	Description	Stock Number [a]
1.	Label Caution	
2.	Joint Female (2)	
3.	Arm 356L	
4.	Tie Rod 1/4-28 Thread 402L (2 see item 12)	
5.	Knob Black M8 Thread Insert	
6.	Retainer Plate Center	
7.	Tube Silicone (2)	
8.	Connector (2)	
9.	Retainer Plate Top Bottom (2)	
10.	Screw M8x60L Hex Head SST	
11.	Support Terminal	
12.	Tie Rod 1/4-28 Thread 503L (2)	
13.	Screw M4x12 Countersunk Phillips (6/joint)	
14.	Cap Joint (2/joint)	
15.	Nut Allen 1/4-28Thread(1/Tierod 12&4)	
16.	Screw M6x20 Cap Socket Head (2/joint)	
17.	Joint w/ Socket Male	
18.	Spring, Comp. .300OD .750L	
19.	Pawl Accessory Block Cable Management	
20.	Washer 0.199ID 0.562OD	
21.	Washer SST 0.195ID	
22.	Screw 10-32 x 1	
23.	Support Swivel	
24.	Gasket 0.656ID 0.953OD (1 or 2 as req)	
25.	Block Mounting	
26.	Pin Pawl 4.76 x 46L	
27.	Post Swivel 15.88 OD	
28.	Plate Friction (2)	
29.	O-Ring 1ID 1.25OD 0.125W (2)	
30.	Spring Ext 6.1OD 0.74W (1/joint)	
31.	Washer Thrust Plastic (2/joint)	
32.	Axle Bearing (1/joint)	
33.	Bearing Roller Clutch (1/joint)	
34.	Spacer Slip Plastic (1/joint)	
35.	Bushing Joint (1/joint)	
36.	Joint Male	
37.	Arm 457L	

[a] Refer to the Cable Management Arm Operation and Maintenance Manual (Stock No. 1602-0002-000) for part numbers.

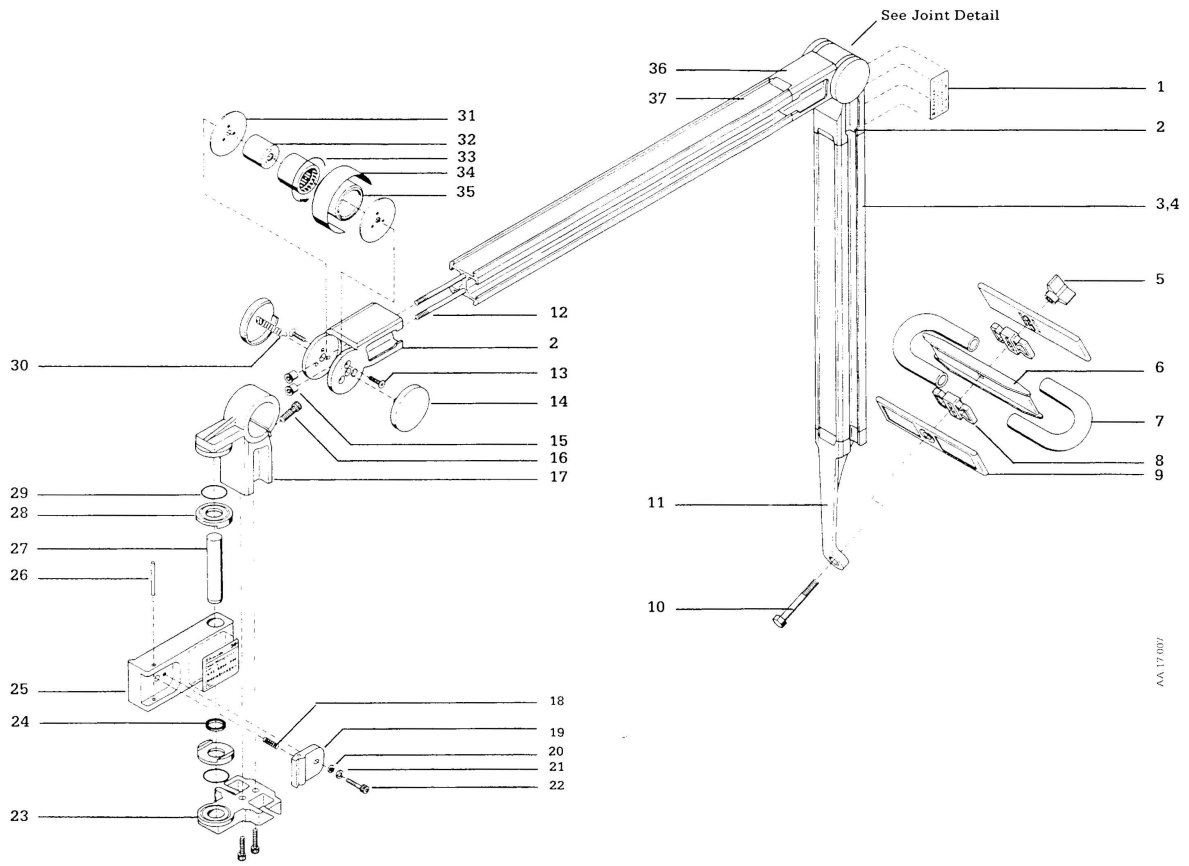

Figure 6-39 Cable management arm (Stock Number 1602-8000-000)

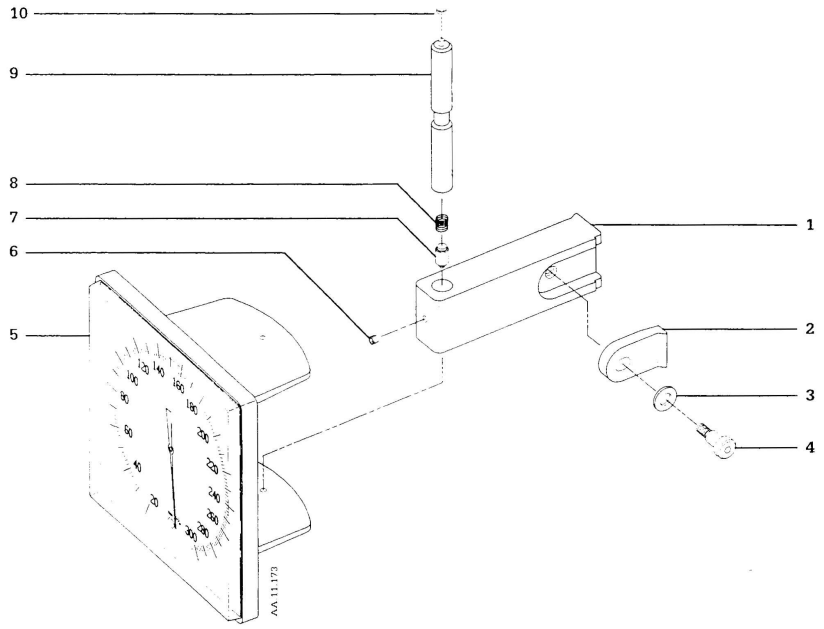

Figure 6-40 Tycos gauge and arm (Stock Number 1001-8957-000)

Item	Description	Stock Number	
1.	Arm Tycos Mounting	1001-5733-000	
2.	Pawl w/o Pin Pivot	1001-5734-000	
3.	Washer Flat 8.4 ID 16.0 OD (2)	0144-1014-140	
4.	Screw M6 (80D x 12LG)	1001-3715-000	a
5.	Gauge Tycos BP w/ tubing	1203-3000-000	b
6.	Screw Grub Socket Head M5x6	9211-0850-065	
7.	Plunger Tycos Gauge	1001-5732-000	c
8.	Spring, Comp. .300OD .750L	0203-3186-300	
9.	Pin Tycos Mounting	1001-5895-000	
10.	O-Ring 1/6 x 1/4 x 1/16 EPR	0210-0547-300	
	Not Shown		
	Connector Luer Female Taper	0204-9002-300	

a Lightly coat threads with Lubriplate (Stock No 0220-5152-300).
b Replacement tubing available from Tycos or a standard hospital supply dealer.
c Screw plunger clockwise into spring.

E. Flowmeter Kit

Note: This kit uses DISS fittings; check compatibility with national standards.

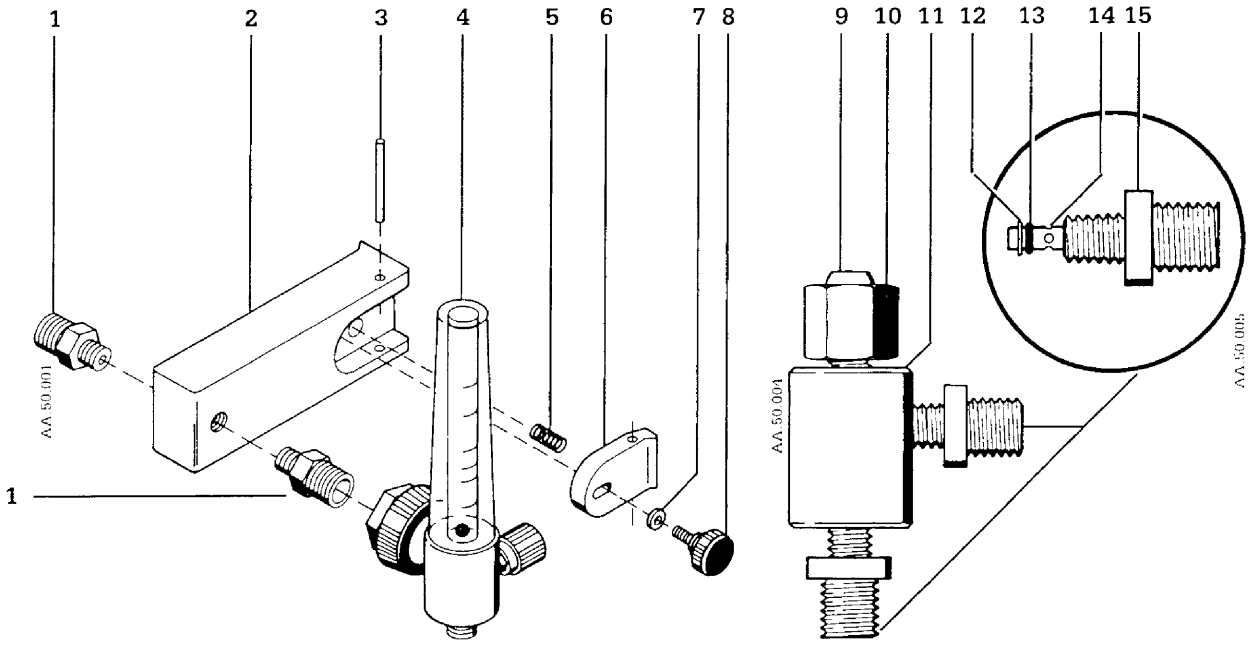

Figure 6-41 Rail mounted flowmeter (Stock Number 1010-8017-000)

Item	Description	Stock Number	
1.	Adapter DISS O2/M 1/8 NPTM (2)	0204-0490-535	a
2.	Block Flowmeter PC O2 Rails	1010-5033-000	
3.	Groove Pin, 5/32 Dia x 1.5 L	0143-3210-424	b
4.	Flowmeter PC O2 1-15 l/min	1601-3000-000	
5.	Spring, Comp. .300OD .750L	0203-3186-300	
6.	Pawl	0236-0566-513	
7.	Washer 0. 199 ID 0.562OD	0402-1042-500	
8.	Knob Accessory Block	0236-0572-300	b
9.	Gland DISS O2 1/8 NPTM	0204-8168-535	
10.	Nut DISS O2 NI Chrome	0204-6534-300	
11.	Tee Body 1/8 NPTF Brass	1010-5032-000	
12.	Ring Truarc 0.156 in Shaft (2)	0203-5226-300	
13.	O-Ring 1/8 x 1/4x 1/16 EPR (2)	0210-0547-300	
14.	Piston O2 Check Outlet (2)	0207-5587-535	
15.	Adapter O2 Outlet Body (2)	0207-5586-535	
	Not Shown	**Stock Number**	
	Hose Assembly O2 DISS F-F 4 ft	0211-8735-800	
	Clamp Cable (4)	1010-3173-000	

a Apply Loctite 242 (Stock Number 0220-5016-300) or an approved equivalent to the 1/8 NPT side of the adapters.

b Apply Lubriplate (Stock No 0220-5152-300) to threads.

F. Gas Scavenging System

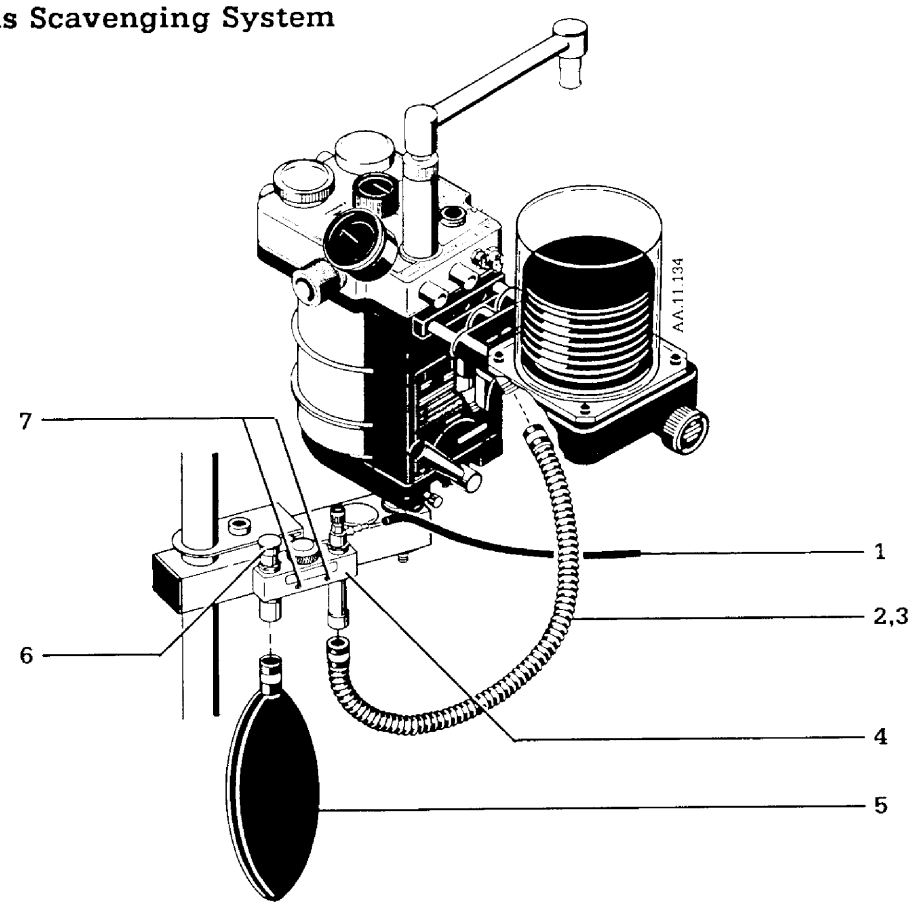

Figure 6-42 Gas scavenging system (Stock Number 0216-6739-872)

Item	Description	Stock Number[a]
1.	Tubing 250ID 0.125W x120 in L	
2.	Tubing 19mm x 90 in L DISP	
3.	Tubing 19mm x 36 in L DISP	
4.	Valve Interface Assembly Gas Evacuation	
5.	Bag 3L w/ Bushing 19mm	
6.	Plug/Cap 0.750ID 0.813OD (2)	
7.	Screw 10-24x2 (2)	

Not Shown	Stock Number[a]
Spring Retainer 0.63DIA	
Screw 10-32 x 1-1/2 (2)	
Bracket Gas Scavenging	
Gas Scavenging Installation Instructions	
Dovetail Mounting Kit	

a Refer to the Gas Scavenging Valve Operation and Maintenance Manual (Stock No. 0178-1728-000) for part numbers.

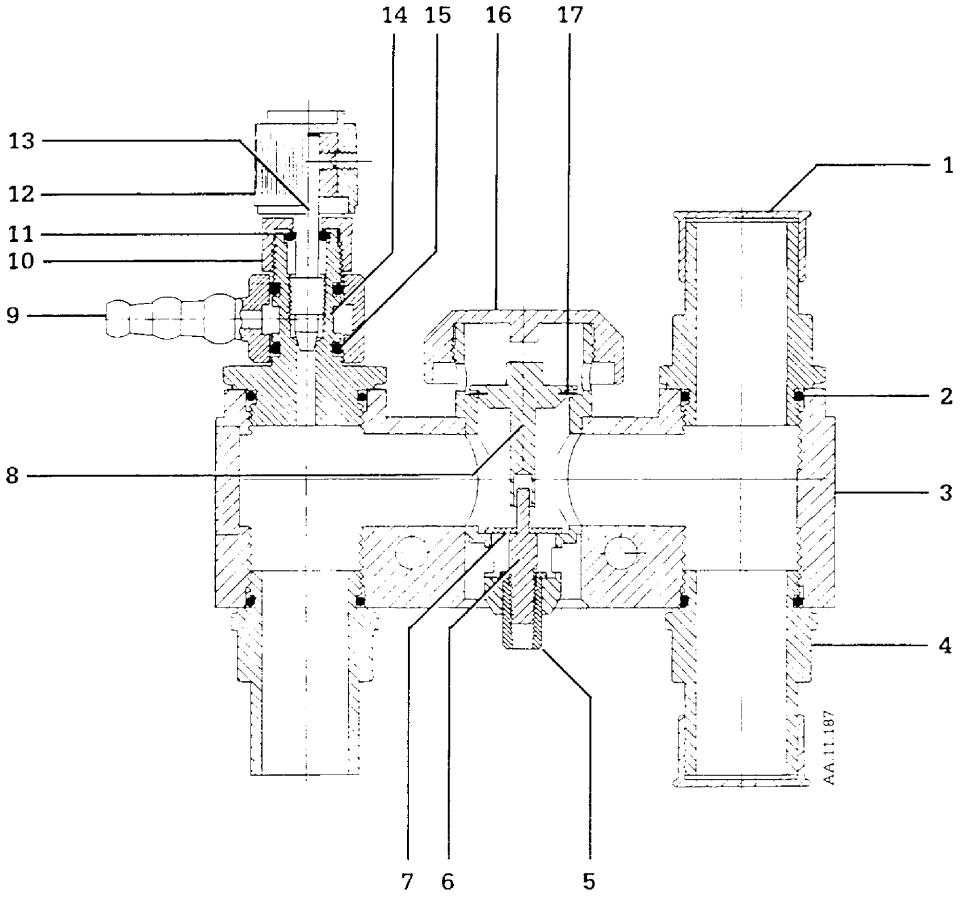

Figure 6-43 Valve interface assembly (Stock Number 0219-1292-800)

Item	Description	Stock Number[a]
1.	Plug Cap .740ID .813OD (2)	
2.	O-Ring 0.688ID .813OD (4)	
3.	Manifold Subassembly Interface Valve	
4.	Nipple Evacuation Hose 3/4OD x 13 (3)	
5.	Button, Release Relief Valve	
6.	Stem, Negative Pressure Relief Valve	
7.	Gasket, Negative Pressure Relief Valve	
8.	Stem, Positive Pressure Relief Valve	
9.	Connector Swivel Assembly	
10.	Nut Packing 1/2-24Threadx5/8	
11.	O-Ring .187ID .312OD	
12.	Knob .187ID .719OD .719T	
13.	Stem Needle Valve Interface	
14.	Body Needle Valve	
15.	O-Ring 3/8ID 1/2OD 1/16W (2)	
16.	Cap Valve 1-27F Thread .51L	
17.	Gasket 0.500ID .750OD	

[a] Refer to the Gas Scavenging Valve Operation and Maintenance Manual (Stock No. 0178-1728-000) for part numbers.

G. Regulator & Trap Rail Mount Kit

Note: This kit uses DISS fittings; check compatibility with national standards.

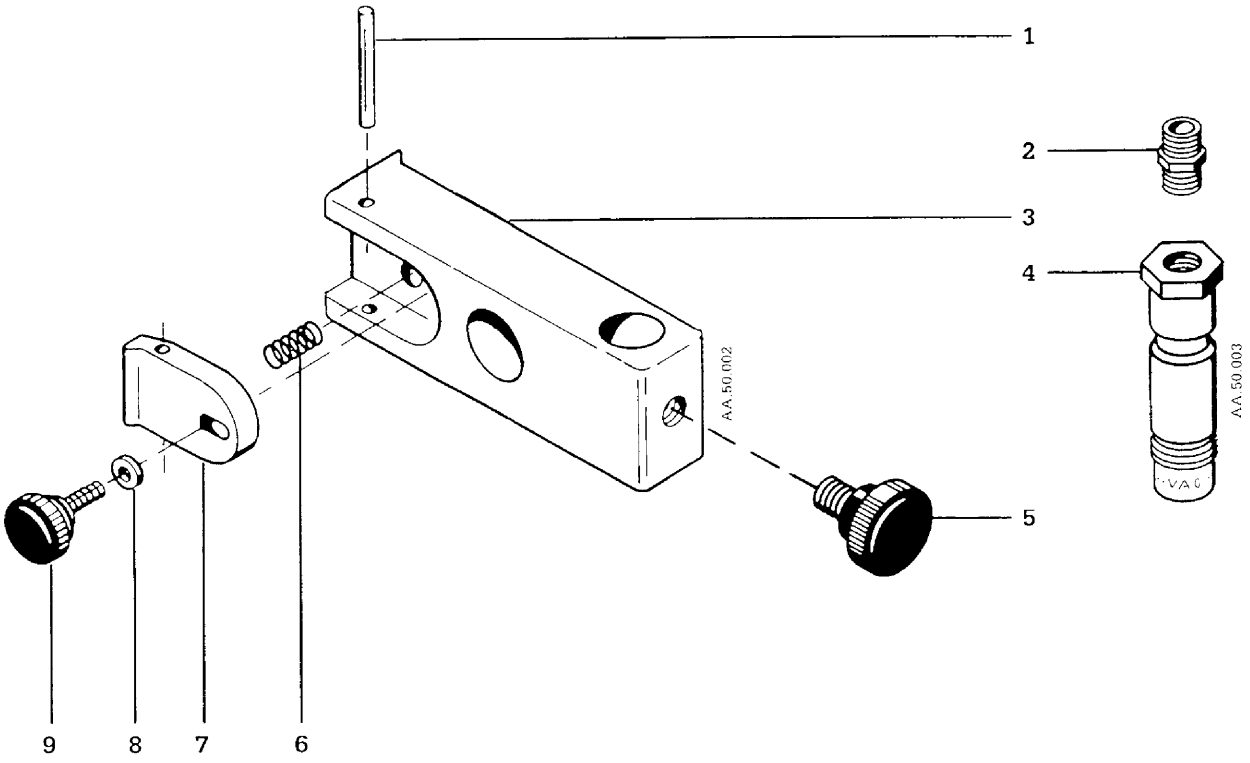

Figure 6-44 Regulator and water trap rail mount kit (Stock Number 1010-8021-000)

Item	Description	Stock Number	
1.	Groove Pin, 5/32 Dia x 1.5 L	0143-3210-424	
2.	Nipple Hex 1/8 NPT Brass	0213-5025-335	a
3.	Block Suction Rail Manifold	1010-5024-000	
4.	Connector Vacuum DISS	1010-5025-000	
5.	Knob Black Plastic 5/16-18	1010-3031-000	
6.	Spring, Comp. .300OD .750L	0203-3186-300	
7.	Pawl	0236-0566-513	
8.	Washer 0.199 ID 0.562OD	0402-1042-500	
9.	Knob Accessory Block	0236-0572-300	b
	Not Shown	**Stock Number**	
	Screw 6-32 x1/8 (4)	0141-4124-105	c
	Screw 6-32 x 0.238 Flat Head Phillips (2)	0400-3157-300	c
	Slide Vac Bottle Mounting	0236-0575-500	c
	Clamp Vacuum Bracket (2)	0239-0592-513	c
	Flowmeter Installation Instructions	1010-0053-000	

a Apply Loctite 242 (Stock No 0220-5016-300) or an approved equivalent to threads.

b Apply Lubriplate (Stock No 0220-5152-300) to threads.

c Part of Vacuum Bottle Slide.

H. RGM Mounting Kits

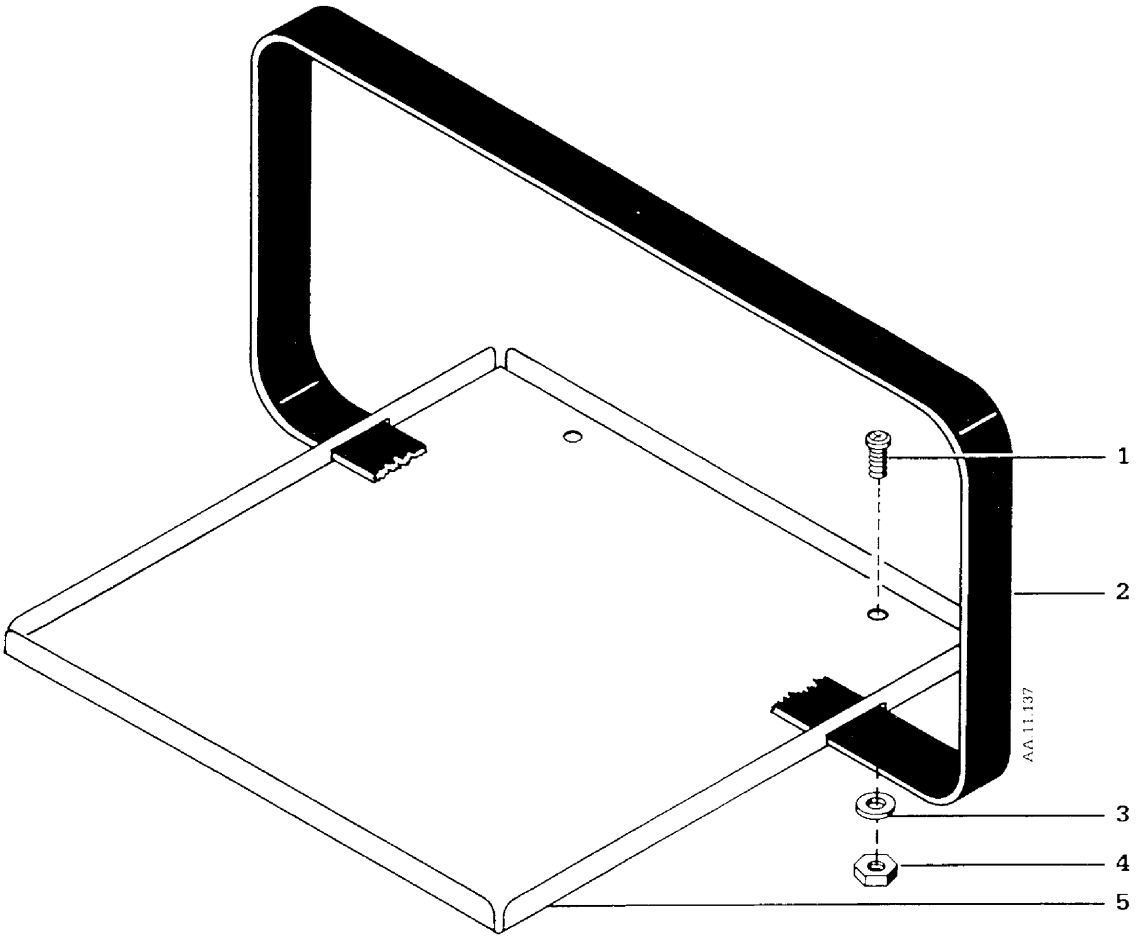

Figure 6-45 RGM tray kit (Stock Number 1001-8954-000)

Item	Description	Stock Number
1.	Screws M6x10, Button Head (2)	9211-1060-103
2.	Strap Velcro 50in L	0203-1481-300
3.	Washer External Lock M6 (4)	9213-0560-003
4.	Nut M6 ST ST (2)	9212-0160-003
5.	Tray RGM Mounting	1001-5887-000

Not Shown	Stock Number
RGM Tray Installation Instructions	1001-0810-000

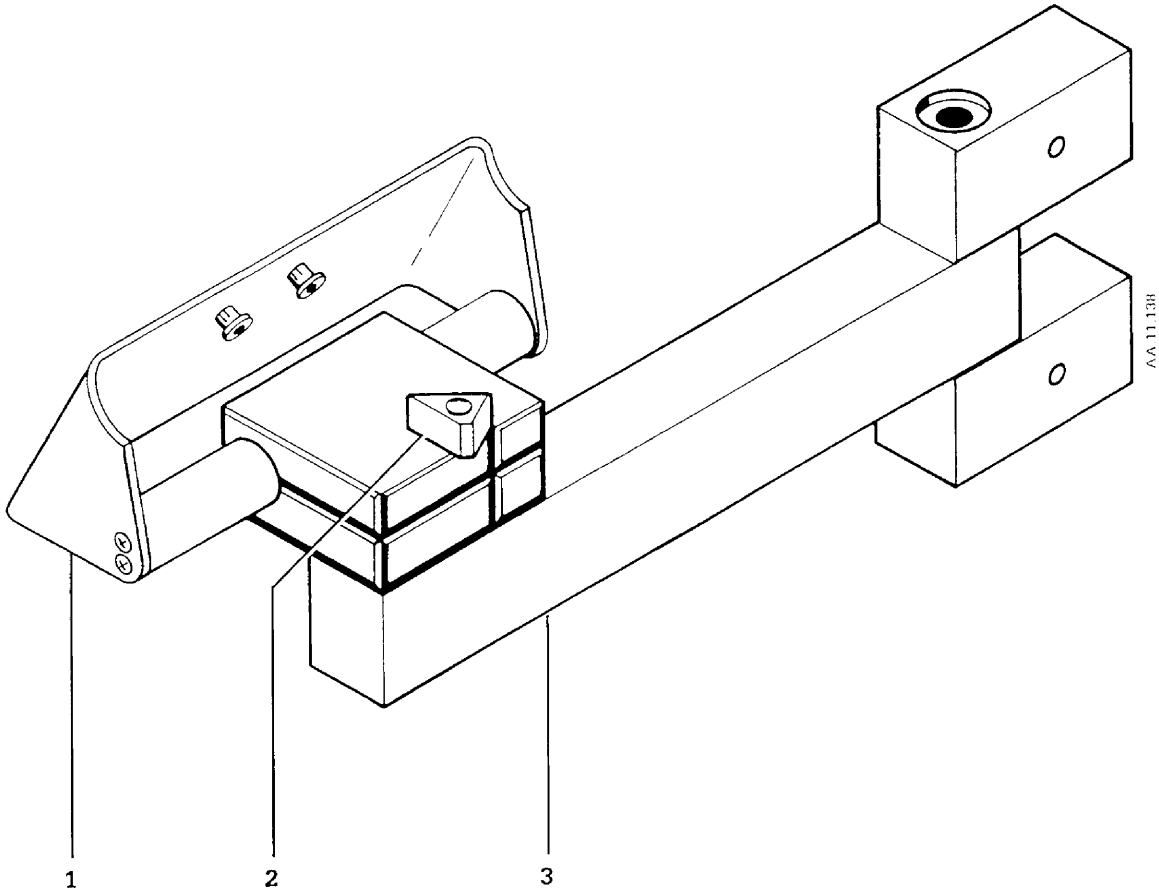

Figure 6-46 RGM screen holder (Stock Number 6050-0001-450)

Item	Description	Stock Number
1.	Assembly Mounting Bracket	6050-0001-445
2.	Knob 1/4-20 Thread 1.25 Lg	6034-0000-007
3.	Arm Support Dovetail	6050-0001-461

I. Shelf Kits

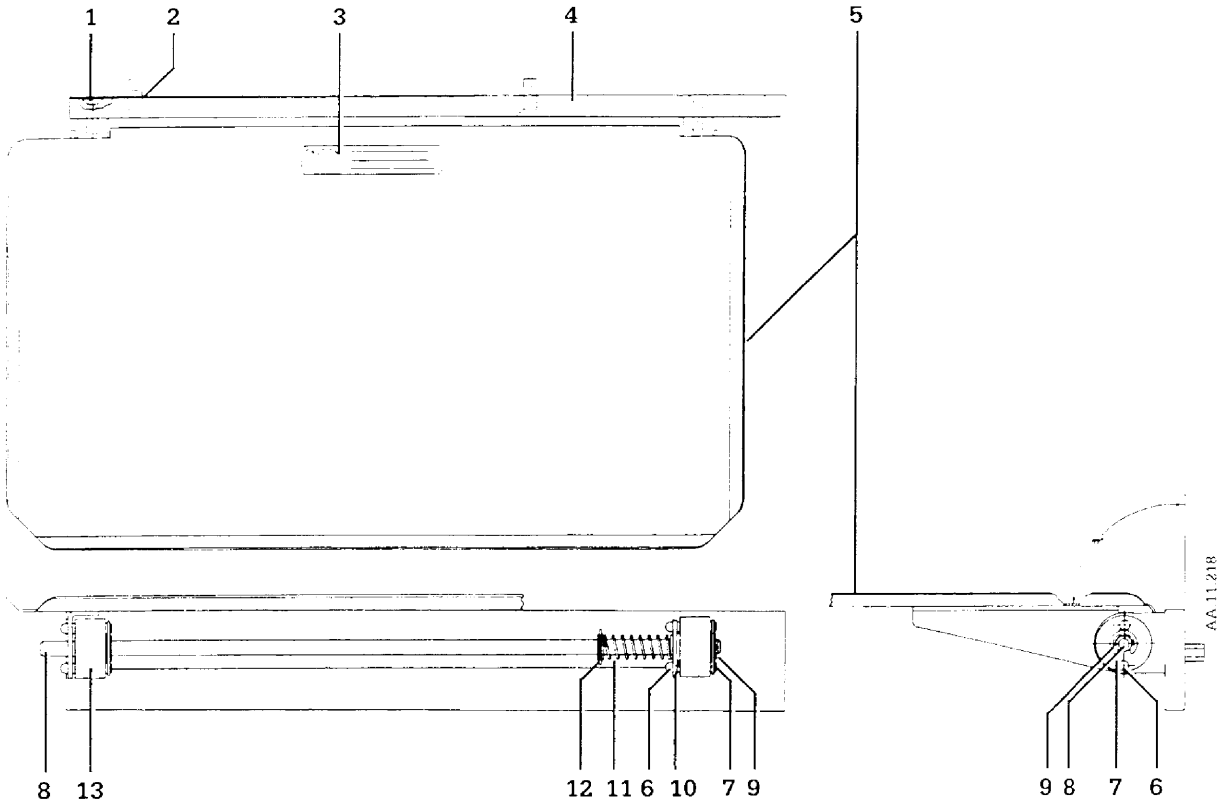

Figure 6-47 Kit flip up shelf assembly (Stock Number 1001-8930-000)

Item	Description	Stock Number	
1.	Screw 1/4-20 x 7/8 Flathead Socket (4)	0144-2536-724	a
2.	Screw M8x25 Countersunk Socket (2)	0144-2440-820	b
3.	Label Shelf Weight Limit	0205-4915-300	
4.	Bracket Mounting Flip Up Shelf	1001-5829-000	
5.	Shelf Welded Subassembly	0236-0084-700	
6.	Pin Locking 0.25 DIA x 1.25 (2/hinge)	0201-0789-500	
7.	Plate Pin Release (1/hinge)	0234-0027-500	
8.	Rod Hinge Flip Up Shelf	0236-0094-500	
9.	Ring Truarc E (5)	0203-5305-300	
10.	Washer Nylon	0402-1134-300	
11.	Spring Com 0.600OD 2.250L	0203-3510-300	
12.	Washer 0.390ID 0.875OD 0.064	0202-4542-335	
13.	Hinge Flip Up Shelf (2)	0236-0087-549	
	Not Shown		
	Washer Flat M8 (2)	9213-0180-006	
	Washer Lock External M8 (2)	0144-1118-225	
	Nut M8x1.25 Hex Stainless (2)	0144-3340-120	

a Apply Loctite 271 (Stock No 220-5020-300) or an approved equivalent to threads.
b Apply Loctite 277 (Stock No 220-5026-300) or an approved equivalent to threads.

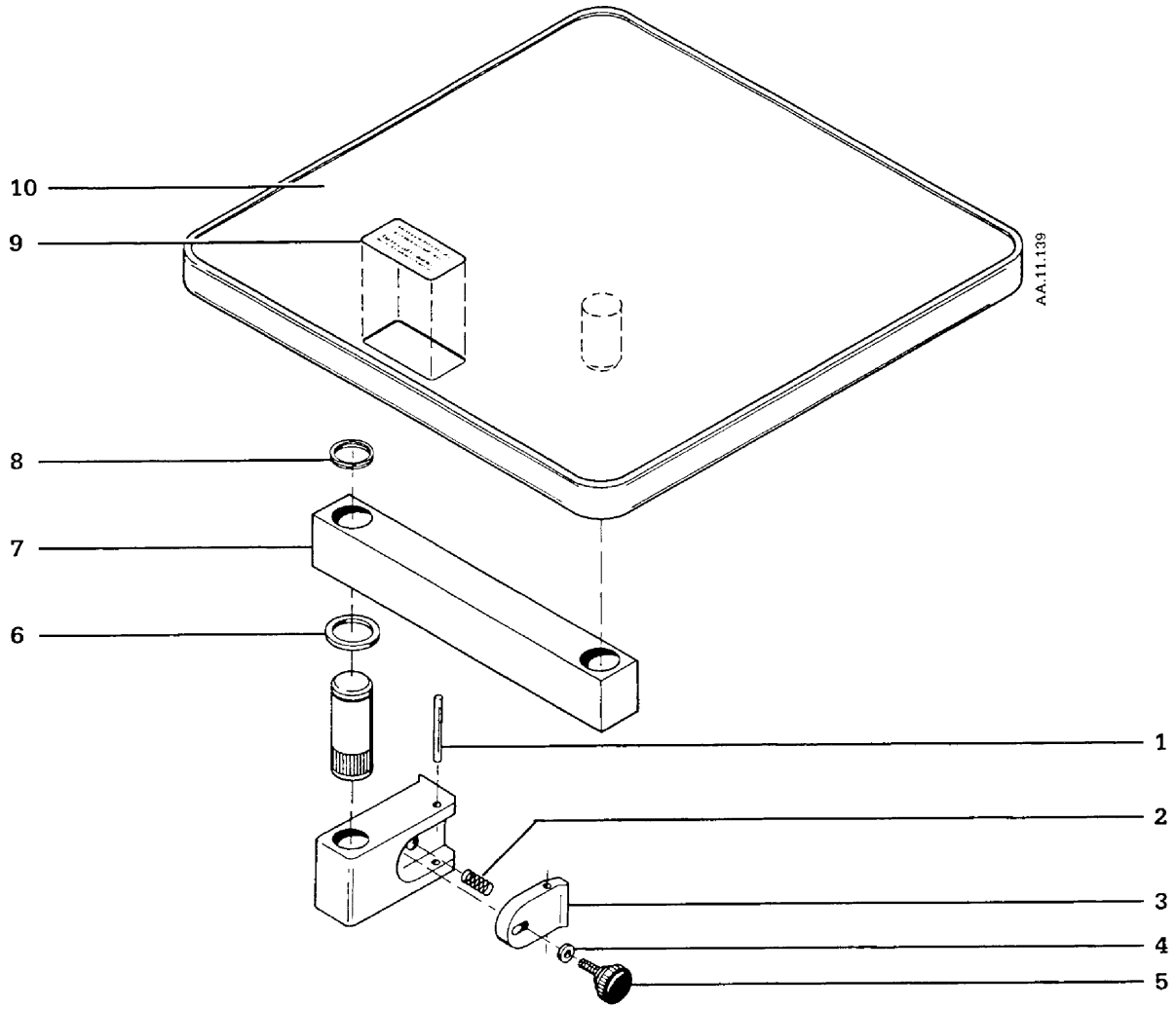

Figure 6-48 Instrument shelf assembly (Stock Number 0216-6812-800)

Item	Description	Stock Number	
1.	Groove Pin, 5/32 Dia x 1.5 L	0143-3210-424	
2.	Spring, Comp. .300OD .750L	0203-3186-300	
3.	Pawl	0236-0566-513	
4.	Washer 0.199ID x 0.562OD	0402-1042-500	
5.	Knob Accessory Block	0236-0572-300	a
6.	Washer 0.750ID 1.0OD 0.062T	0402-1043-500	
7.	Arm Swivel Shelf Support	0236-0573-513	
8.	Ring Lock Spiral 0.75 Shaft	0203-5184-300	
9.	Label Shelf Weight Limit	0205-4953-300	
10.	Shelf, Swivel, 12 x 12 in	0236-0577-600	

a Apply Lubriplate (Stock No 0220-5152-300).

J. Utility Mounting Posts

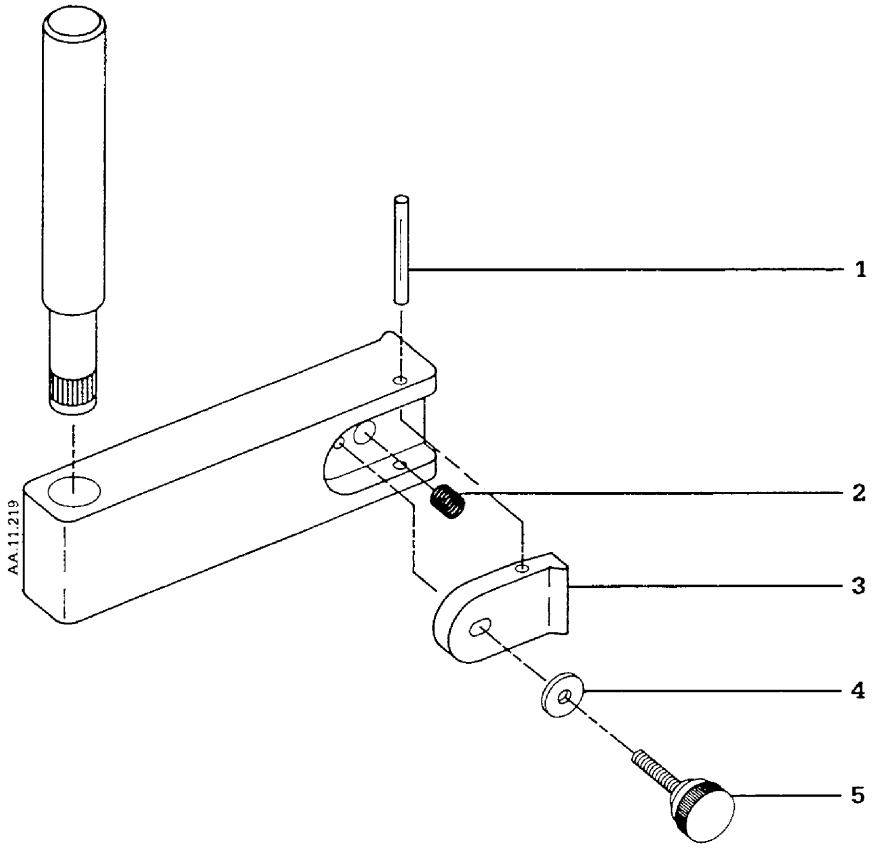

Figure 6-49 Utility post assembly 1 x 3.5 x 6 in (Stock Number 1600-9002-000)

Item	Description	Stock Number	
1.	Groove Pin, 5/32 Dia x 1.5 L	0143-3210-424	
2.	Spring, Comp. .300OD .750L	0203-3186-300	
3.	Pawl Long Version	0236-0566-513	
4.	Washer, .199 ID x .500 OD	0402-1042-500	
5.	Knob Accessory Block	0236-0572-300	a

a Apply Lubriplate (Stock No 0220-5152-300).

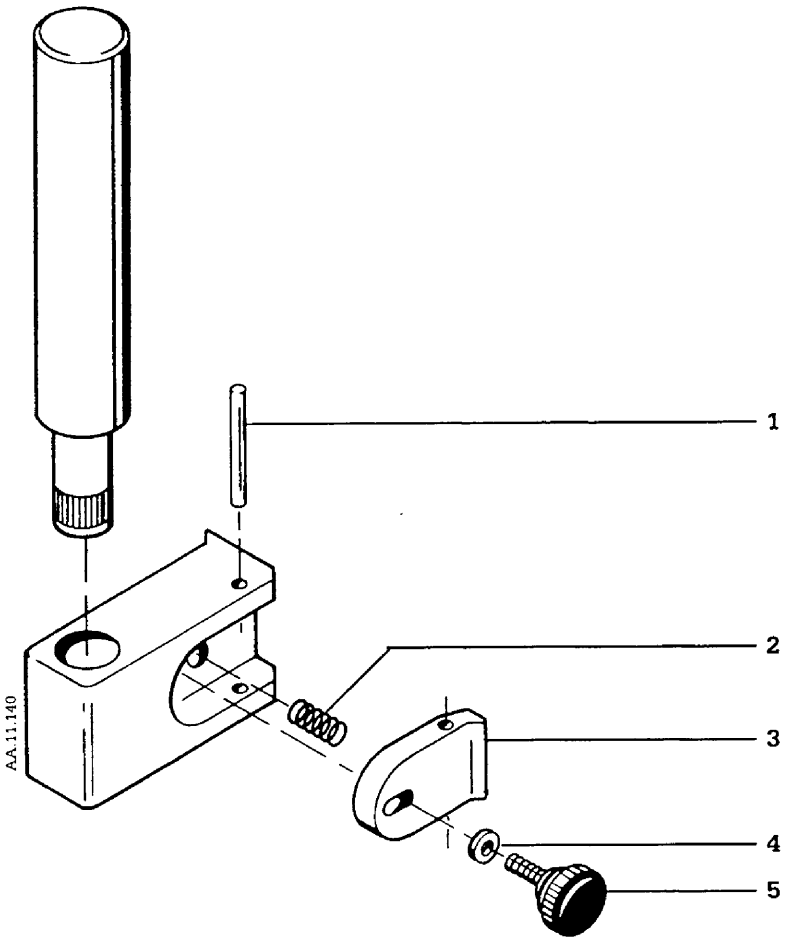

Figure 6-50 Post utility 1 in x 3.5 in (Stock Number 0216-6819-800)

Item	Description	Stock Number	
1.	Groove Pin, 5/32 Dia x 1.5 L	0143-3210-424	
2.	Spring, Comp. .300OD .750L	0203-3186-300	
3.	Pawl	0236-0566-513	
4.	Washer 0.199ID x 0.562OD	0402-1042-500	
5.	Knob Accessory Block	0236-0572-300	a

a Apply Lubriplate (Stock Number 0220-5152-300)

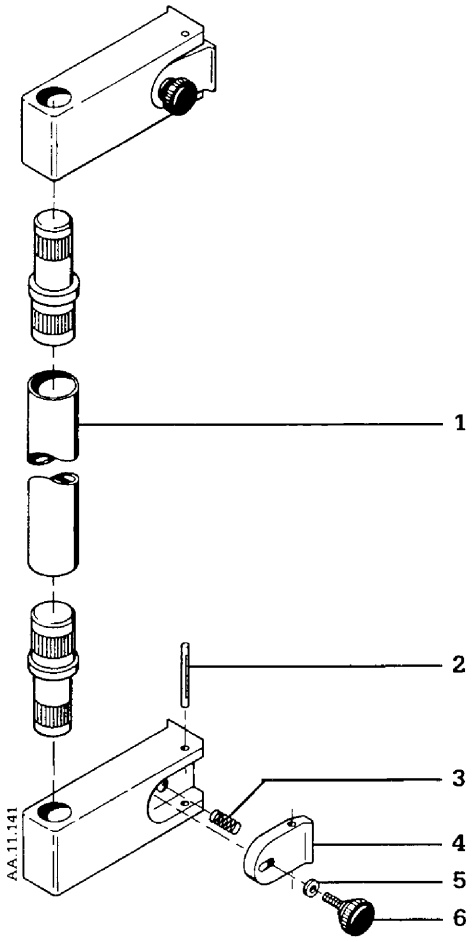

Figure 6-51 Post utility 1 in x 20 in (Stock Number 0216-6813-800)

Item	Description	Stock Number	
1.	Tube Accessory Mounting 22 in	0236-0571-500	
2.	Groove Pin, 5/32 Dia x 1.5 L (2)	0143-3210-424	
3.	Spring, Comp. .300OD .750L (2)	0203-3186-300	
4.	Pawl (2)	0236-0566-513	
5.	Washer 0.199ID x 0.562OD(2)	0402-1042-500	
6.	Knob Accessory Block (2)	0236-0572-300	a

a Apply Lubriplate (Stock Number 0220-5152-300)

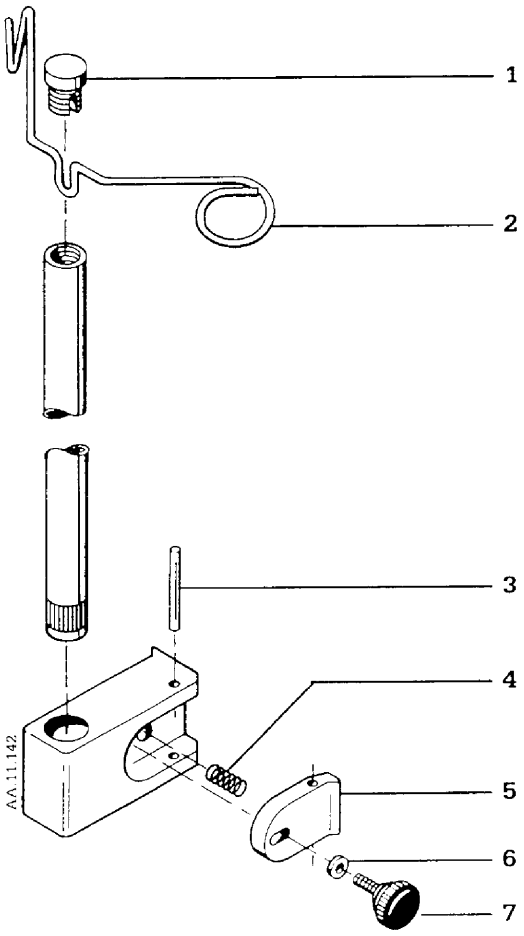

Figure 6-52 IV pole assembly (Stock Number 0216-6814-800)

Item	Description	Stock Number	
1.	Cap IV Pole 0.812OD	0236-0563-535	a
2.	Hanger IV Pole 0.188 CRS	0236-0562-500	
3.	Groove Pin, 5/32 Dia x 1.5 L	0143-3210-424	
4.	Spring, Comp. .300OD .750L	0203-3186-300	
5.	Pawl	0236-0566-513	
6.	Washer 0.199ID x 0.562OD	0402-1042-500	
7.	Knob Accessory Block	0236-0572-300	b

a Apply Loctite 277 (Stock No 0220-5025-300) or an approved equivalent
b Apply Lubriplate (Stock Number 0220-5152-300)

K. Vaporizer Storage Bracket

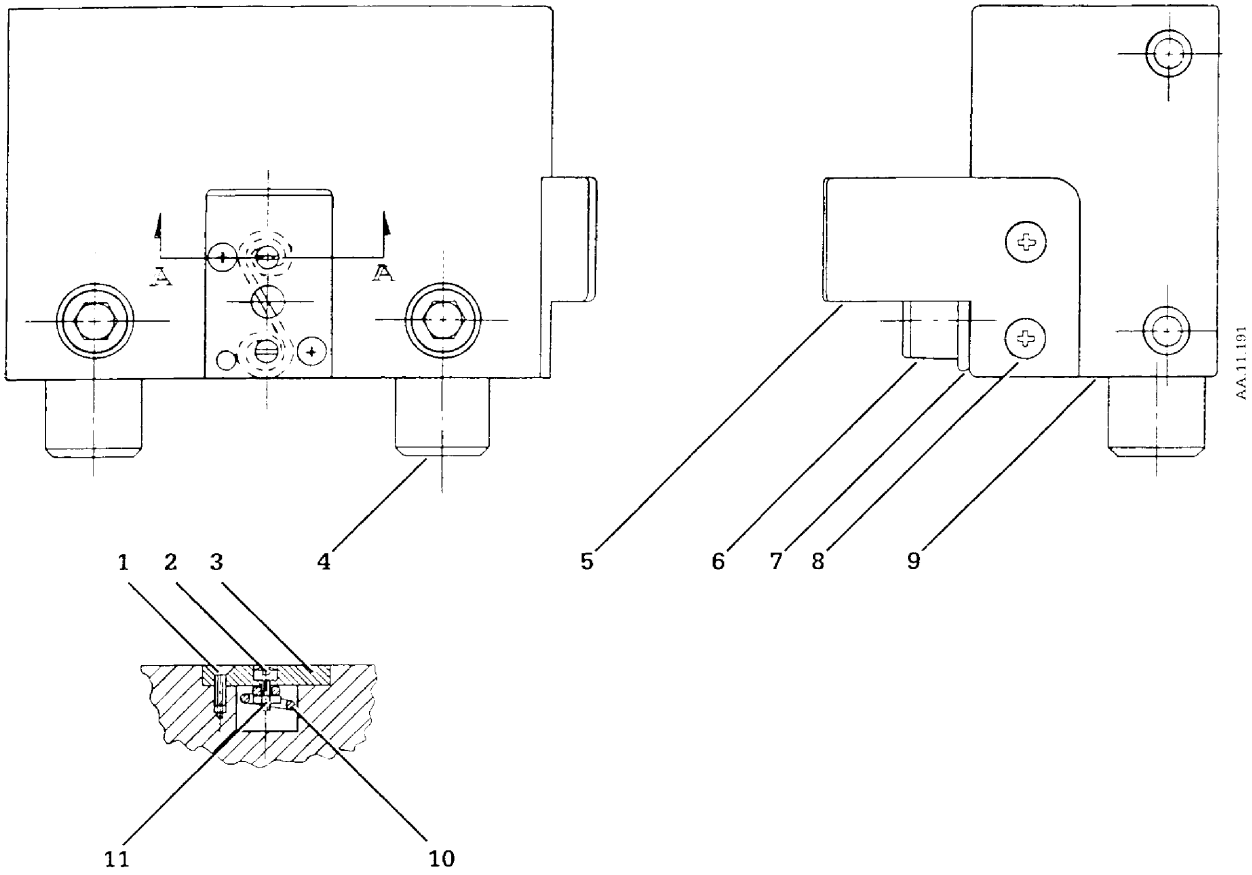

Figure 6-53 Vaporizer storage bracket for Tec 4 (Stock Number 1001-8904-000)

Item	Description	Stock Number
1.	Screw M3x8 Flat Head Phillips ST (2)	9211-0530-083
2.	Screw 6BA Thread x1/4LG ST (2)	0400-3146-300
3.	Plate Spring Cyprane	0219-0613-552
4.	Button Rest Cyprane Manifold (2)	0219-0614-500
5.	Plate Vaporizer Storage Safety	1001-4135-000
6.	Pin Locator Vaporizer Storage (2)	1001-4149-000
7.	O-Ring 9/16ID x 3/32W (2)	0210-0736-300
8.	Screw M4x 0.7 8 mm Long (2)	9211-0540-083
9.	Block Vaporizer Storage	1001-4145-000
10.	Spring Retainer 0.63DIA	0203-5024-300
11.	Nut 6BA Thread 0.190 Hex (2)	0402-1962-300
	Not Shown	
	Screw M5x90 Cup Socket Head (3)	9211-0650-907
	Tec 5 Adapter	1001-8983-000
	Vap Store Brkt Installation Instructions	1001-0939-000

L. Ventilator Mounting Arms

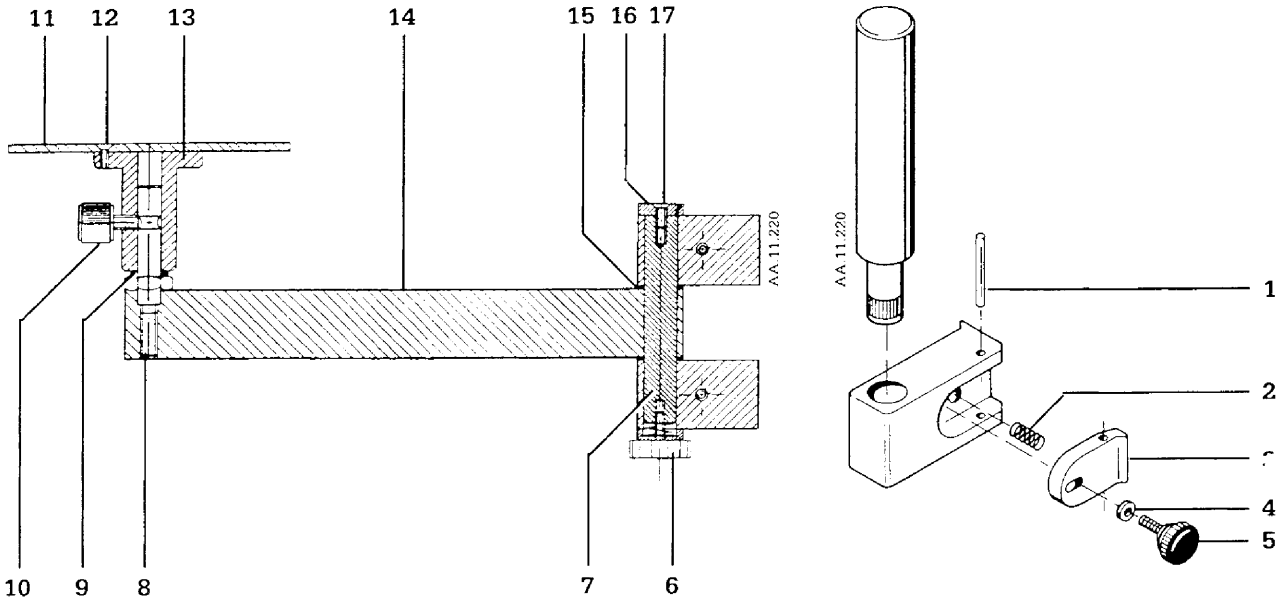

Figure 6-54 7000 Ventilator remote arm (complete 1001-8903-000)

Item	Description	Stock Number	
1.	Groove Pin, 5/32 Dia x 1.5 L (2)	0143-3210-424	a
2.	Spring, Comp. .300OD .750L (2)	0203-3186-300	
3.	Pawl (2)	0236-0566-513	b
4.	Washer, .199 ID x .500 OD (2)	0402-1042-500	
5.	Screw 10-32x1 (2)	0144-2131-916	c
6.	Knob 38 mm Dia Fluted	1001-3965-000	
7.	Pin 0.75in Dia ST ST M6 Thread	1001-5913-000	
8.	Pin Hinge Vent Mounting Arm	0236-0180-500	
9.	O-Ring 0.500ID 0.687OD	0210-0603-300	
10.	Knob 0.875 Dia	0400-3533-300	c
11.	Plate Mounting	0219-7403-549	
12.	Screw 10x24x1/2 (3)	0144-2530-208	
13.	Flange Mounting Post Vent	0219-7390-550	
14.	Arm Vent Mounting Bracket	1001-5914-000	
15.	Washer 0.750ID 1.0OD 0.062T (2)	0402-1043-500	c
16.	Cap Countersunk Head M6-6 mm (2)	1001-5915-000	d
17.	Screw M6x16 Countersunk	9211-0960-167	

Not Shown	Stock Number
Screw 10-32x1/2 in Phillips Head SST(4)	0140-6631-108
Washer, Internal Lock, #10 SHKPR (4)	0202-3438-340

a Press in flush; no more than 0.03 mm above surface on either side.

b Must operate freely

c Apply Lubriplate (Stock No. 0220-5152-300) lightly to threads.

d Apply Loctite 242 (Stock No. 0220-5016-300) or an approved equivalent

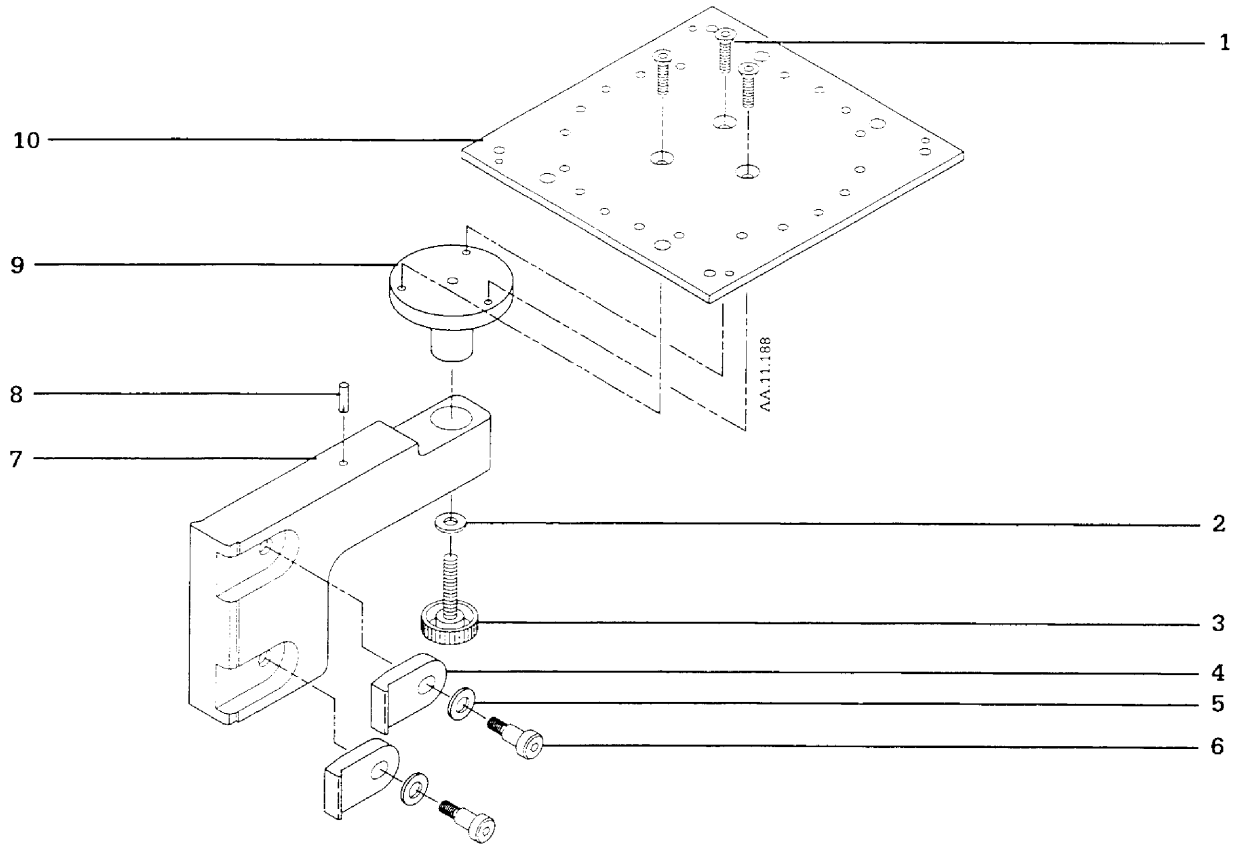

Figure 6-55 7800 Ventilator short remote arm (1001-8953-000)

Item	Description	Stock Number	
1.	Screw 10-x24 - 1/2 (3)	0144-2530-208	
2.	Washer 6.4 ID 14.3 OD	1001-3709-000	
3.	Thumbscrew 26 DIA M6x30 LG	1500-3263-000	
4.	Pawl w/o Pin Pivot (2)	1001-5734-000	
5.	Washer Flat 8.4 ID 16.0 OD (2)	0144-1014-140	
6.	Screw M6 (80D x 12LG) (2)	1001-3715-000	a
7.	Arm Vent Bellows Mounting Bracket	1001-5897-000	
8.	Groove Pin 5/32 x 9/16	0143-3210-409	b
9.	Flange Mounting Post Vent Bellows	1001-5896-000	
10.	Plate Vent and Bellows Mounting	1001-5892-000	

Not Shown	Stock Number
7800 Remote Arm Installation Instructions	1001-0824-000

a Apply Lubriplate (Stock No 0220-5152-300) sparingly to threads.

b Exposed height of 5.1 ± 1.0 mm

Figure 6-56 Integral mounting kit 7800 and 7000 (Stock Number 1001-8907-000)

Item	Description	Stock Number	
1.	Label Knob Locking Bellows Mounting	0205-4903-300	
2.	Screw 8-32x3/8	0144-2127-206	a b
3.	Knob Bellows Mount Lock	0212-1954-100	b
4.	Support Lock Mechanism (2)	0236-0453-552	b
5.	Rod Bellows Locking	0236-0450-500	b
6.	Ring Truarc 0.375 Shaft (2)	0203-5314-300	b
7.	Support Guide Bellows Mounting (2)	0236-0451-552	b
8.	Plate Vent Bellows Mounting	0234-1078-700	b
9.	Washer Lock Internal 10 WH NI (8)	0202-3210-340	b
10.	Screw 10-32x1/2 (8)	0140-6631-108	b
11.	Manifold Absorber to Bellows	0236-0478-700	b
12.	Support Subassembly Bellows	0236-0479-700	b

Not Shown	Stock Number	
Adapter Bellows Inlet	0236-0486-742	b
O-Ring 0.625ID 0.750 OD	0210-0562-300	b
Screw 3/8-24 x3/4 Socket Head (2)	0400-1097-300	b
Tube/Corrugated 39.5 w/ Bushing	0211-0809-800	b
Tube Flex Wire Reinforced	0211-0842-300	b
Tab Hanging Black Neoprene (4)	0211-1419-300	b
Tubing Clear 0.125ID 0.250 OD (7 ft)	0994-6370-010	b
Screw 8-32x3/16 (3)	0144-4227-106	b
Integ Vent Mtg Installation Instructions	1001-0937-000	b

a Apply Loctite 242 (Stock No 0220-5016-300) or an approved equivalent sparingly to threads.

b Included in Bellows Mounting Plate Kit (Stock Number 1001-8907-000)

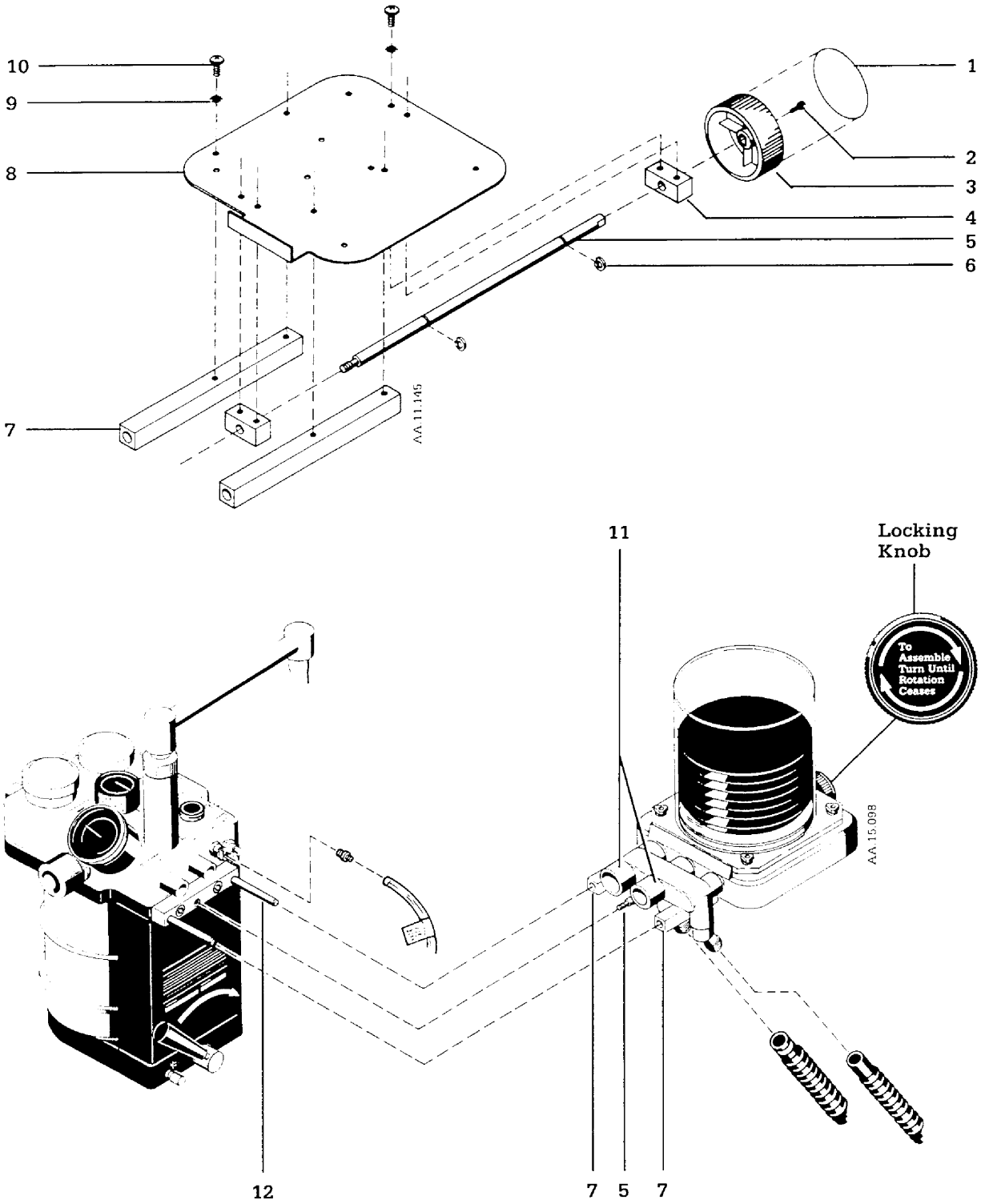

Figure 6-56 Integral mounting kit 7800 and 7000 (Stock Number 1001-8907-000)

6.5 Label Sets

Figure 6-57 Label GND main (Stock Number 1010-3044-000)

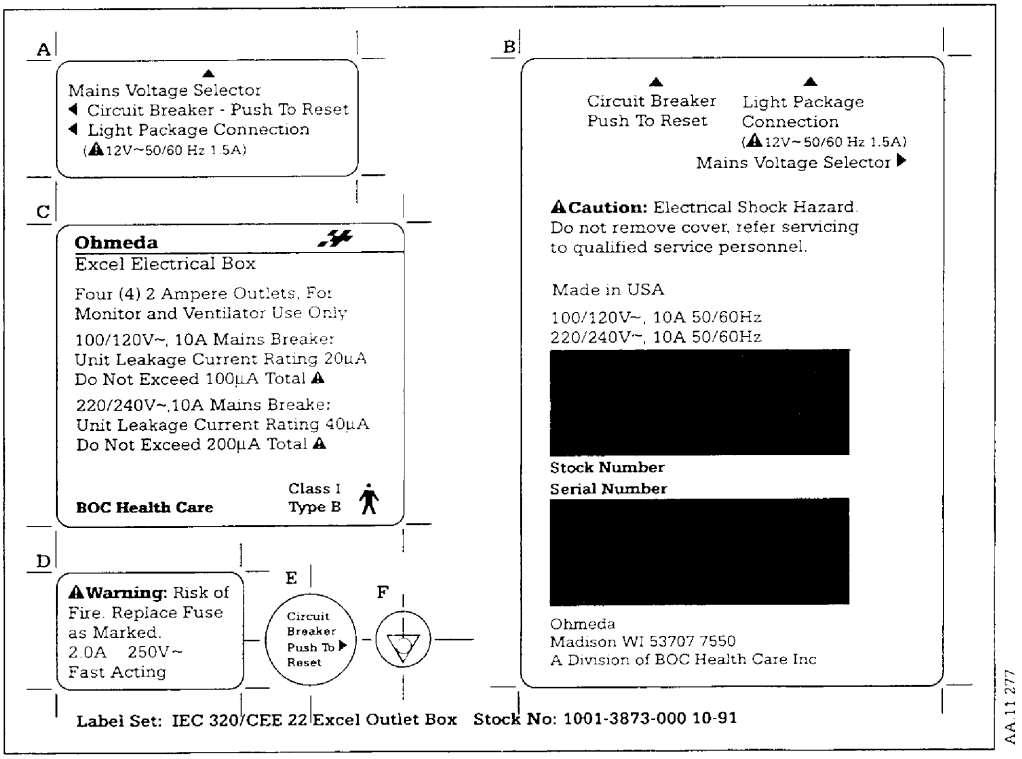

Label Set Outlet Box German	1001-3797-000
Label Set Outlet Box IEC English	1001-3873-000
Label Set Outlet Box French	1001-3739-000

Figure 6-58 Power outlet box label (IEC English shown)

Figure 6-59 Label equipotential (Stock Number 1001-3737-000)

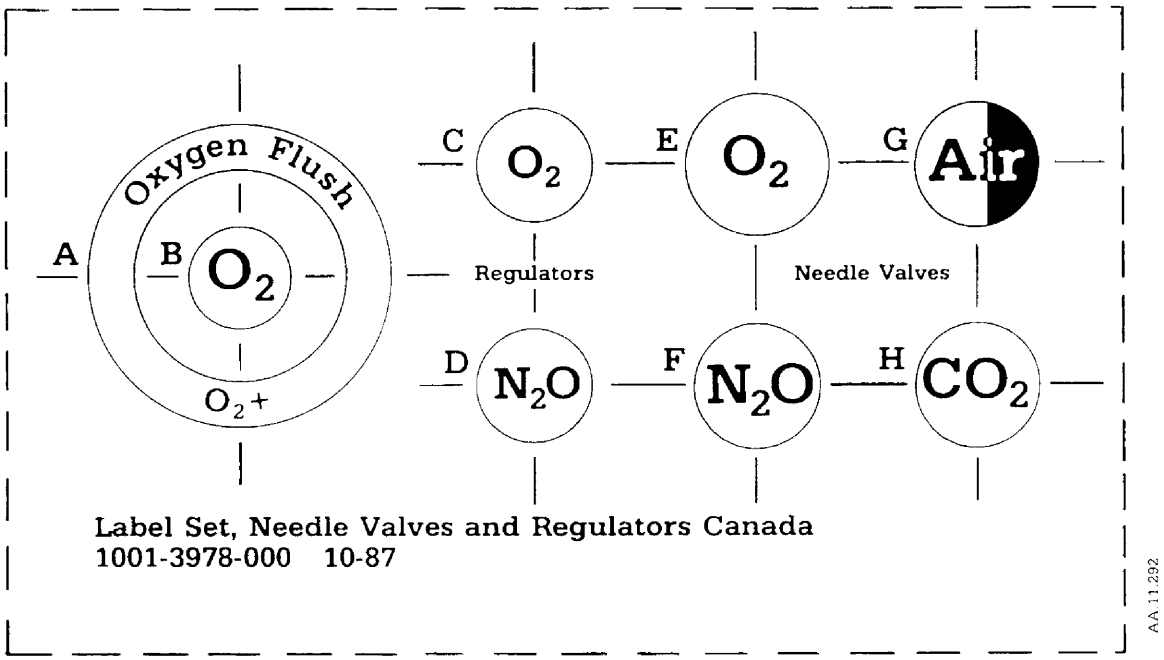

Color Code	Stock Number
ISO Color Code [a]	1001-3978-000
Austrian Color Code	1001-3814-000
German Color Code	1001-3793-000
Swiss Color Code	1001-3801-000

[a] Use the ISO label set with all countries not specifically listed.

Figure 6-60 Regulator and needle valve label sets (ISO version shown)

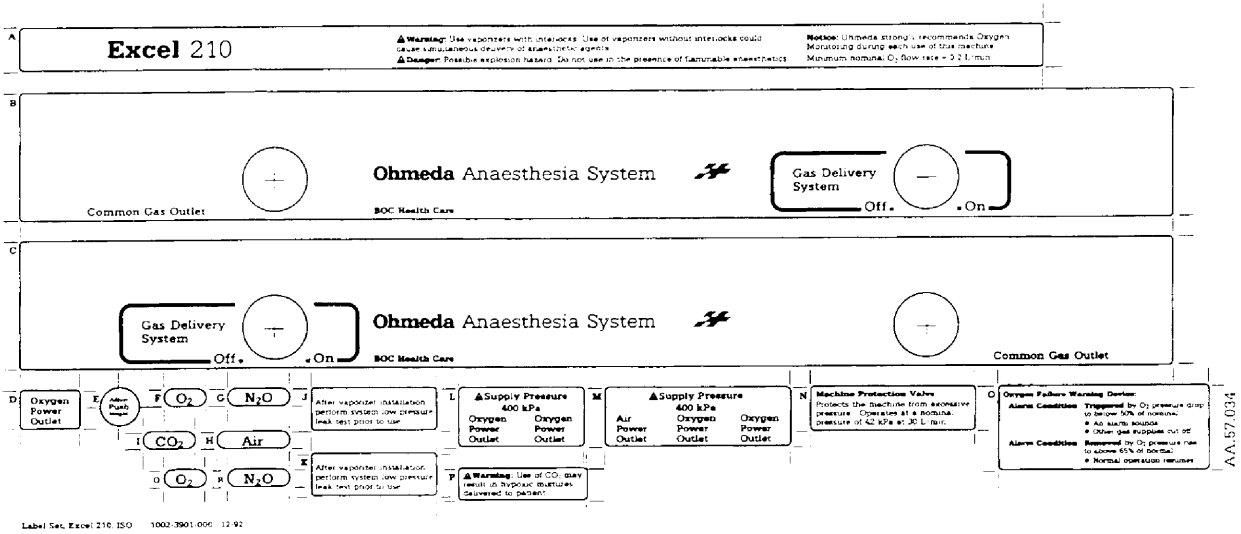

Country	Excel 110	Excel 210	Excel 410
Austria	----------	1002-3905-000	----------
Australia	----------	1002-3901-000 and 1002-3910-000	----------
France	----------	1002-3917-000	----------
German	----------	1002-3920-000	----------
Iso Standard	1005-3905-000	1002-3901-000	1004-3902-000
Italy	1005-3904-000	1002-3902-000	----------
Spain	1005-3906-000	1002-3906-000	----------
Scandinavia	----------	1002-3908-000	----------
Switzerland	----------	1002-3903-000	----------

Figure 6-61 Typical main label set

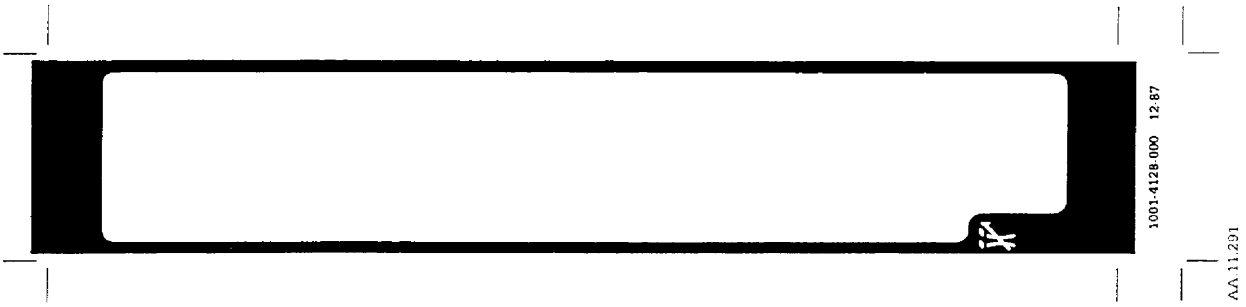

	O2 Flowtube Label (color)	N2O Flowtube Label (color)	Air Flowtube Label (color)	CO2 Flowtube Label (color)
ISO Color Code	1001-4126-000 White	1001-4128-000 Blue	1001-4130-000 Black/White	1001-3558-000 Gray
Austrian Color Code	1001-4127-000 Blue	1001-3820-000 Yellow	1001-4131-000 Gray	_____
German Color Code	1001-4127-000 Blue	1001-3790-000 Gray	1001-4129-000 Yellow	_____
Swiss Color Code	1001-4127-000 Blue	1001-3806-000 Green	1001-3807-000 Brown	_____

Figure 6-62 Flowtube label sets

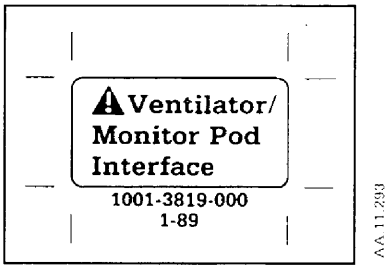

French Excel	Not Used
German Excel	1001-3603-000
Label excel/vent/ (all other models)	1001-3819-000

Figure 6-63 Excel/Ventilator interface label

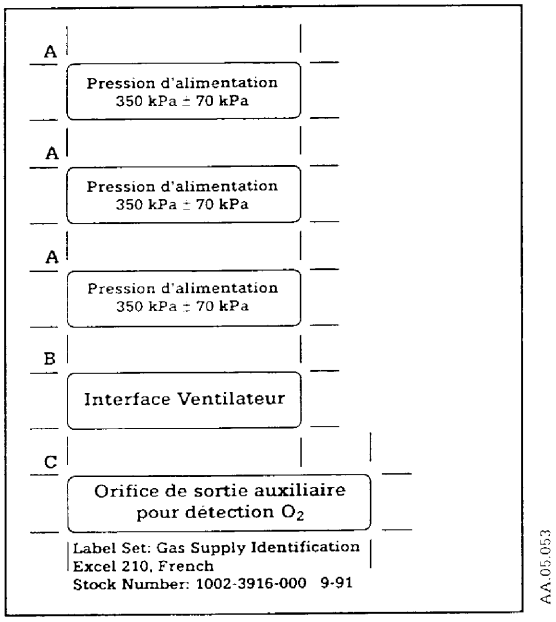

Figure 6-64 Gas supply ID (French Excel only) 1002-3916-000

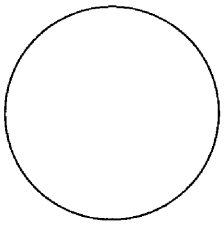

Figure 6-65 Label Blue 21 mm (Stock Number 1001-3712-000)

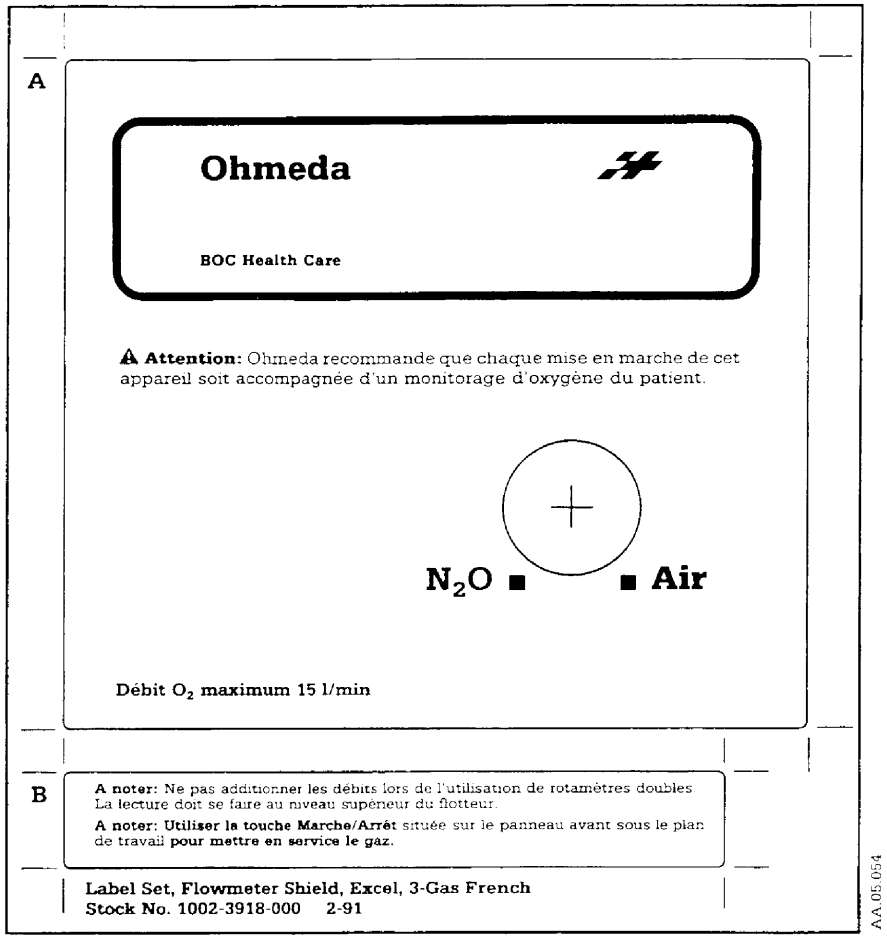

Country	Selector Switch label set	Additional Flowmeter Shield Labels
France	1002-3918-000	————————
German	1001-3602-000	1001-7982-000
Spain (210 only)	1002-3907-000 (210 only)	————————
Switzerland	1002-3904-000	————————

Figure 6-66 Air/N_2O selector switch and flowmeter shield labels

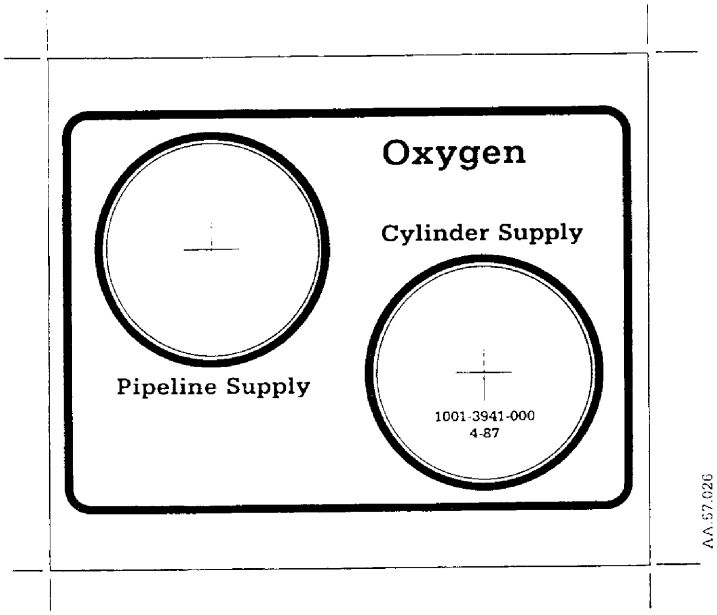

Label Gauge O2	
Label Gauge O2 Cyl/Pl Austria	1001-3816-000
Label Gauge O2 Cyl/Pl Australia	1001-3976-000
Label Gauge O2 Cyl/Pl Germany	1001-3794-000
Label Gauge O2 Cyl/Pl France	1002-3913-000
Label Gauge O2 Cyl/Pl Standard ISO	1001-3976-000
Label Gauge O2 Cyl/Pl+Extra Cyl ISO	1001-3983-000
Label Gauge O2 Pl Only Italy	1001-3994-000
Label Gauge O2 Pl Only Spain	1001-3824-000
Label Gauge O2 Cyl/Pl Scandinavia	1001-3857-000
Label Gauge O2 Cyl/Pl Switzerland	1001-3802-000
Label Gauge N2O	
Label Gauge N2O Cyl/Pl Austria	1001-3817-000
Label Gauge N2O Cyl/Pl Australia	1001-3942-000
Label Gauge N2O Cyl/Pl Germany	1001-3795-000
Label Gauge N2O Pl Only France	1002-3914-000
Label Gauge N2O Cyl/Pl Standard ISO	1001-3942-000
Label Gauge N2O Cyl/Pl+Extra Cyl ISO	1001-3940-000
Label Gauge N2O Pl Only Italy	1001-3995-000
Label Gauge N2O Pl Only Spain	1001-3825-000
Label Gauge N2O Cyl/Pl Scandinavia	1001-3858-000
Label Gauge N2O Cyl/Pl Switzerland	1001-3803-000
Label Gauge Air (210 or 410 only)	
Label Gauge Air Cyl/Pl Austria	1001-3818-000
Label Gauge Air Cyl/Pl Australia	1001-3977-000
Label Gauge Reserve O2 Cyl/Air Pl Germany	1001-3796-000
Label Gauge Air Pl Only France	1002-3915-000
Label Gauge Air Cyl/Pl Standard ISO	1001-3977-000
Label Gauge Air Pl Only Italy	1001-3996-000
Label Gauge Air Pl Only Spain	1001-3826-000
Label Gauge Air Cyl/Pl Scandinavia	1001-3859-000
Label Gauge Air Cyl/Pl Switzerland	1001-3804-000
Label Gauge CO2 Cyl Only ISO	1001-3984-000

Figure 6-67 Gas supply gauge labels

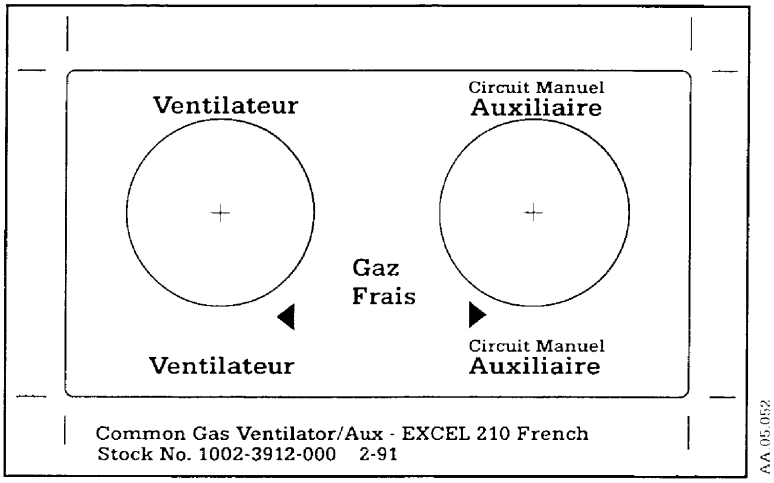

Label common gas vent/aux 1002-3912-000

Figure 6-68 French dual common gas outlet labels

6.6 Test Fixtures

Note: Excels without Mini-Schrader power outlets use Figure 6-70 for primary regulator tests and Figure 6-71 for low O_2 pressure alarm tests.

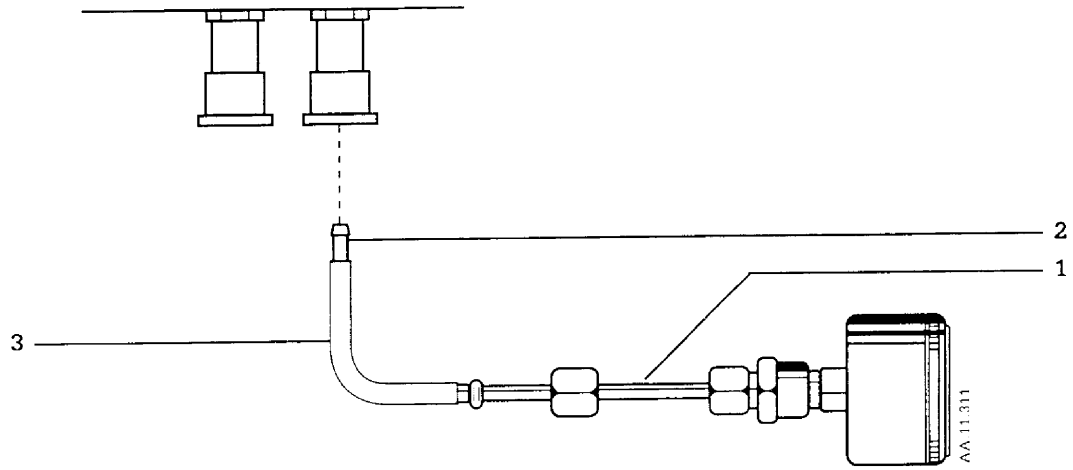

Figure 6-69 Test fixture for low O_2 pressure alarm, O_2 and air primary regulator adjustments

Item	Description	Stock Number
1.	Regulator Adjustment Tool	0175-0543-000
2.	Fitting O2 Mini Schrader to 0.25 Inch Nipple	1001-3852-000
	Fitting Air Mini Schrader to 0.25 Inch Nipple	1001-3851-000
3.	Hose Rubber 0.25 inch Inner Diameter	0995-6439-010

⚠WARNING: Wear safety glasses while the test fixture is connected to a regulator test port (on flowmeter module) or primary regulator output.

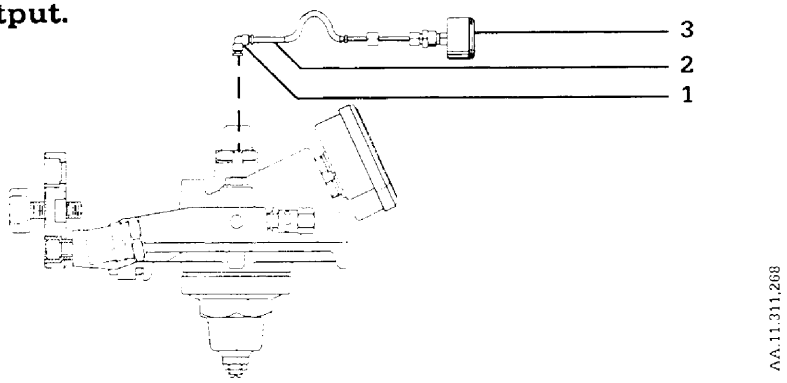

Figure 6-70 Test fixture for primary regulator adjustments

Item	Description	Stock Number
1.	Fitting Elbow Tubing 4 mm (CO2)	1001-3510-000
	Fitting Elbow Tubing 5 mm (N2O)	1001-3511-000
	Fitting Elbow Tubing 6 mm (O2)	1001-3512-000
	Fitting Elbow Tubing 8 mm (Air)	1001-3513-000
2.	Tube 4mm OD Nylon (CO2)	1001-3060-000
	Tube 5mm OD Nylon (N2O)	1001-3061-000
	Tube 6mm OD Nylon (O2)	1001-3062-000
	Tube 8mm OD Nylon (Air)	1001-3063-000
3.	Regulator Adjustment Tool	0175-0543-000

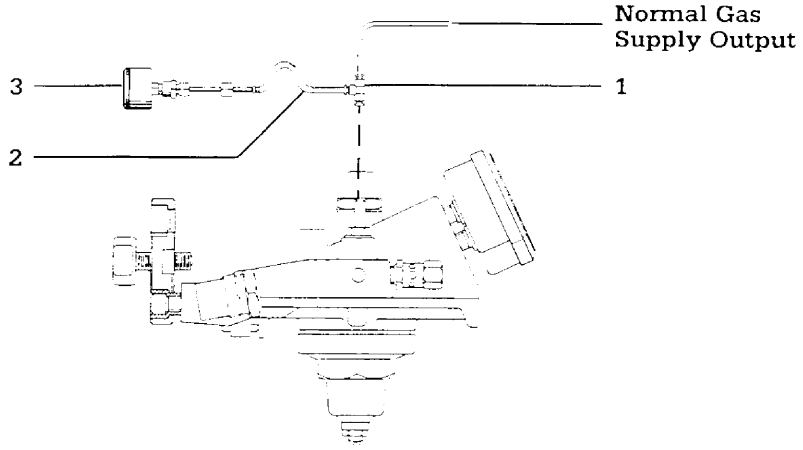

Figure 6-71 Test fixture for low O_2 alarm adjustments on Excels without Mini-Schrader power outlets (Scandinavian)

Item	Description	Stock Number
1.	Fitting Tee 6 mm (O2)	1001-3516-000
2.	Tube 6mm OD Nylon (O2)	1001-3062-000
3.	Regulator Adjustment Tool	0175-0543-000

⚠**WARNING: Wear safety glasses while the test fixture is connected to a regulator test port (on flowmeter module) or primary regulator output.**

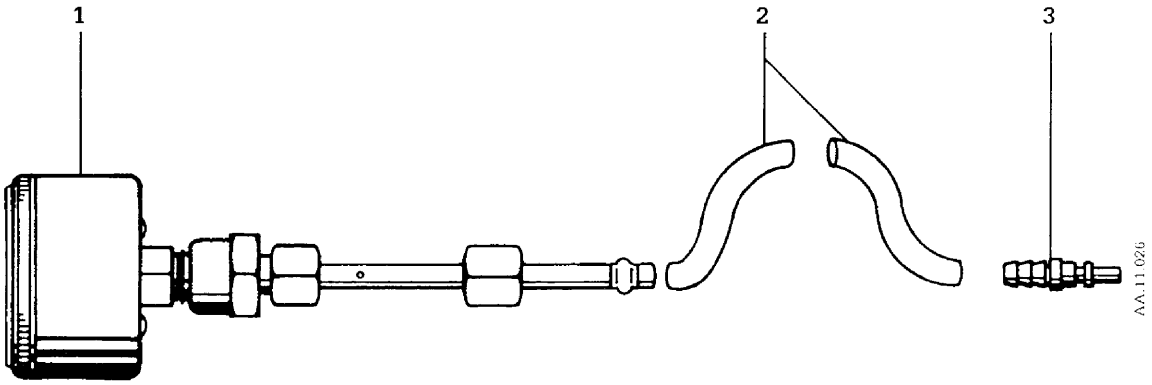

Figure 6-72 Test fixture for secondary regulator adjustments

Item	Description	Stock Number
1.	Regulator Adjustment Tool	0175-0543-000
2.	Tubing, 3/16 in (specify 1 foot)	0994-6396-010
3.	Hose Barb	1001-3573-000

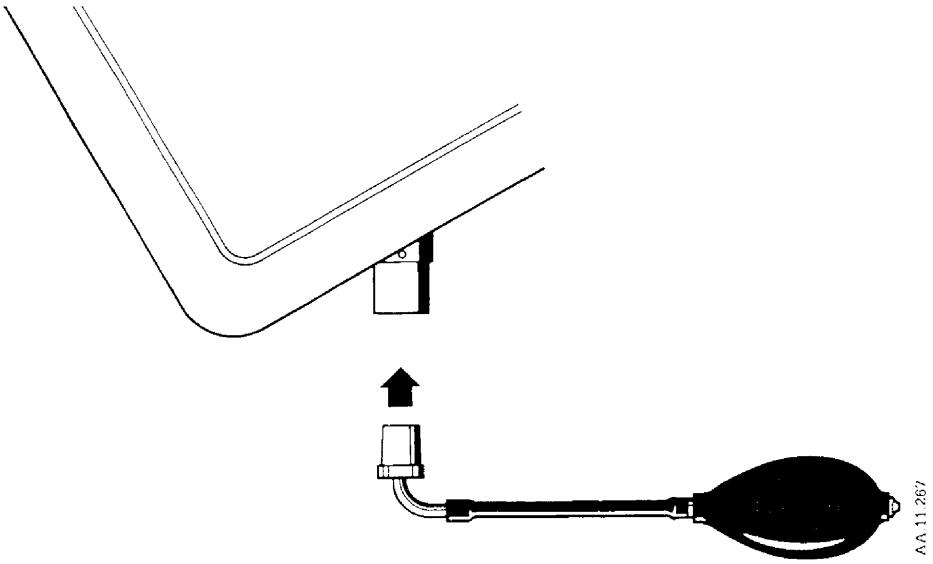

Figure 6-73 Low pressure leak test device (negative pressure test) (Stock Number 0309-1319-800)

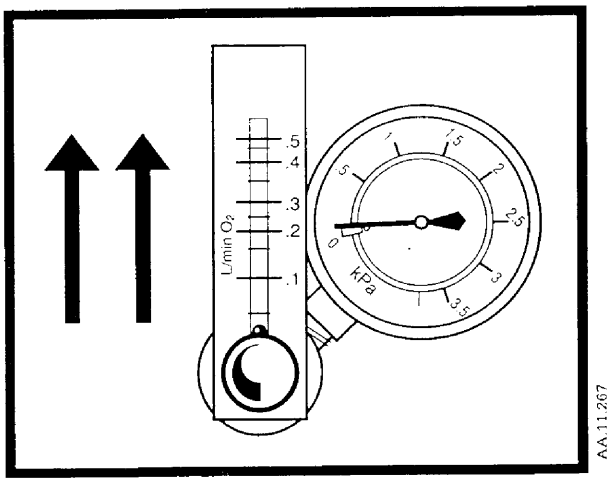

Positive pressure low press. leak test device BSI Standard	1001-8975-000
Positive pressure low press. leak test device ISO Standard	1001-8976-000

Figure 6-74 Low pressure leak test device (positive pressure test)

6.7 Tools, Touch Up Paint, Sealants, Etc.

Description	Stock Number
Blanking Plug 4 mm CO2	1001-3530-000
Blanking Plug 5 mm N2O	1001-3531-000
Blanking Plug 6 mm O2	1001-3532-000
Blanking Plug 8 mm Air	1001-3533-000
Bolt, 6 mm, Standard Thread, Clean	1001-4041-000
Krytox	1001-3854-000
Loctite 222	0220-5011-300
Loctite 242	0220-5016-300
Loctite 271	220-5020-300
Loctite 277	220-5026-300
Lubriplate	0220-5152-300
Riken Gas Indicator Vapor Absorption Kit	7011-0004-001
RM 121 Respirometer	0220-1800-600
Safety Goggles	7000-0000-015
Static Control Work Station	0175-2311-000
Teflon Tape	Self Procured
Test Lung	0219-7210-300
Test Plugs, Bag Port	2900-0001-000
Torque Adapter (for Knob Set Screws)	0397-2190-035
Torque Driver 0-25 lb-in	0175-2038-000
Touch Up Paint Charcoal (8oz)	0220-0177-300
Touch Up Paint Dark Blue (8oz)	0220-0208-300
Touch Up Paint Light Blue (8oz)	0220-0179-300

7/Schematics and Wiring Diagrams

7.1 Power Outlet Box Schematic

Numbers

1. Power Cord
2. German Outlet Box
3. Light Package Power
4. 7800 Ventilator
5. 5250 Respiratory Gas Monitor
6. Light Package

Abbreviations

L	Mains, Line Voltage
N	Neutral
G	Ground
SW1	Voltage Selector Switch
RTN	Voltage Return

Symbols

Circuit Breakers

Circuit Breakers

Thermal Fuse

Fuse

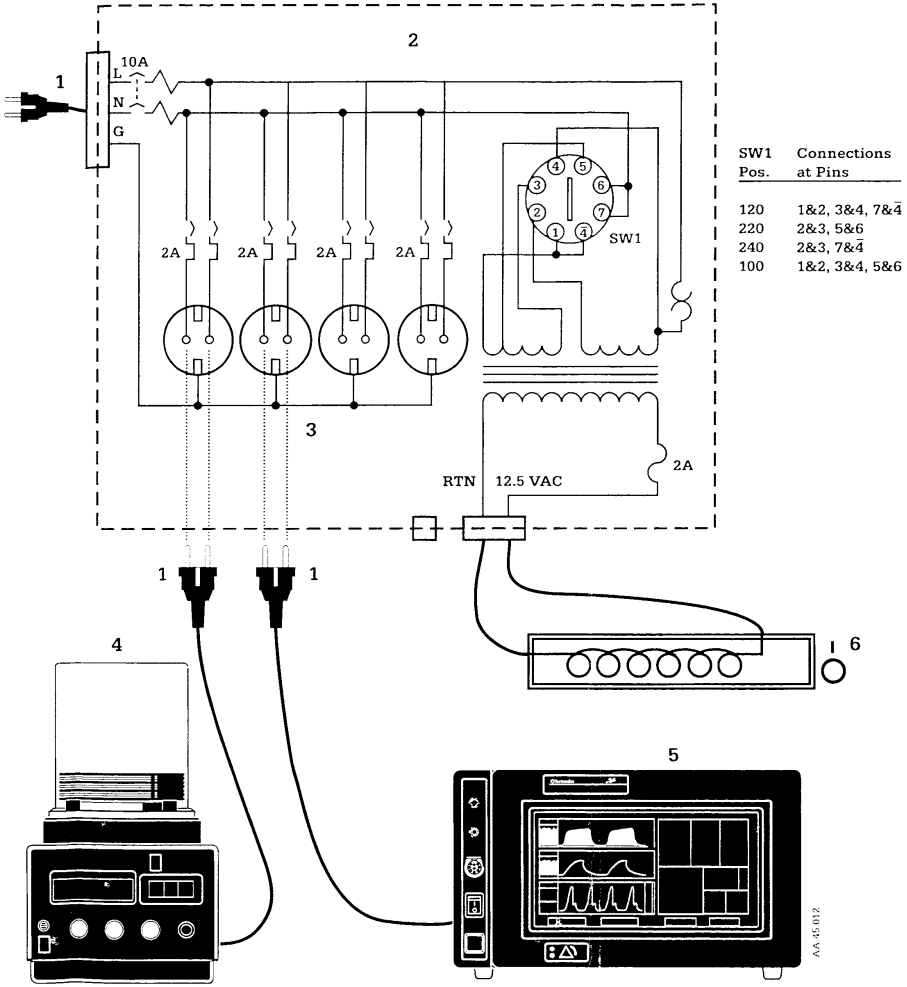

SW1 Pos.	Connections at Pins
120	1&2, 3&4, 7&$\bar{4}$
220	2&3, 5&6
240	2&3, 7&$\bar{4}$
100	1&2, 3&4, 5&6

Figure 7-1 Power outlet box schematic

7.2 Outlet Box Wiring

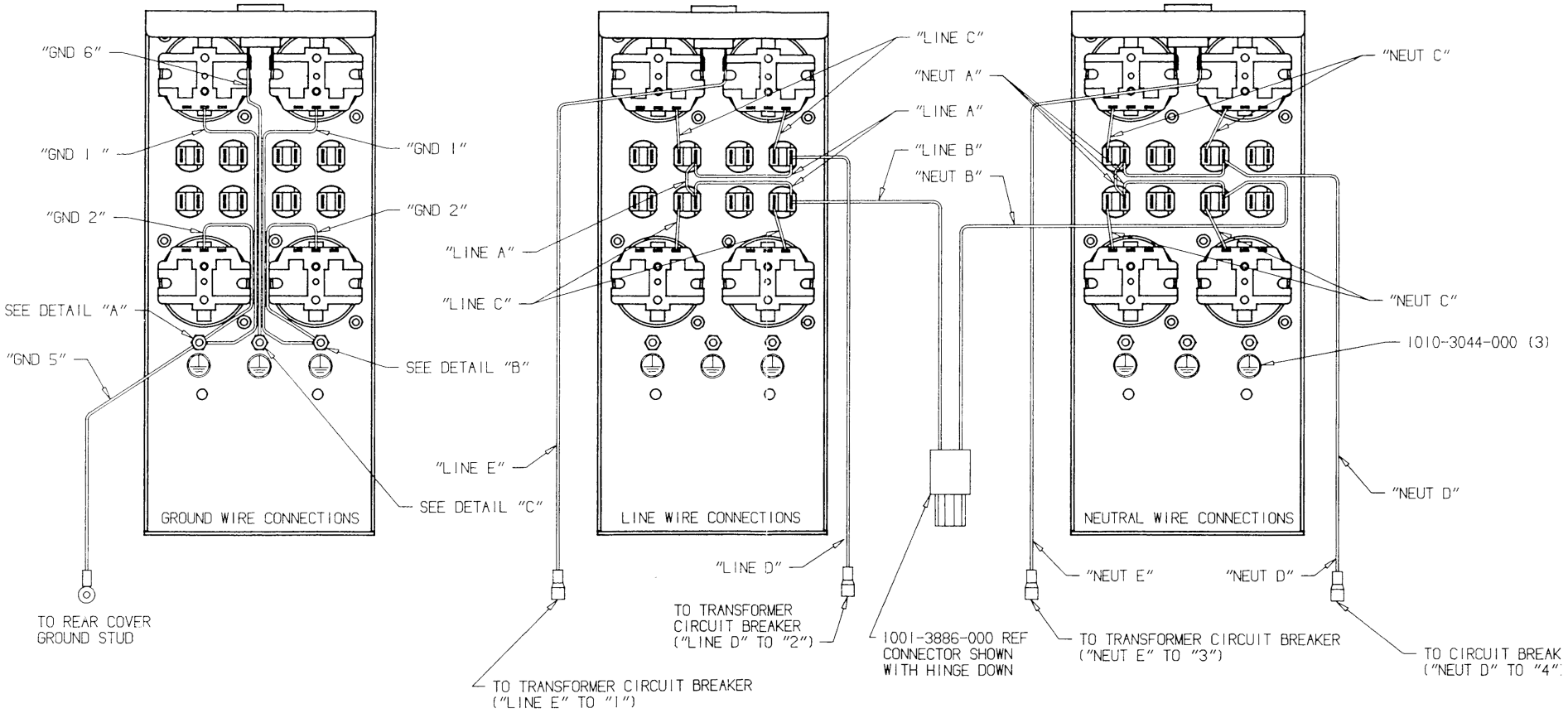

Figure 7-2 Outlet box wiring

7/Schematics and Wiring Diagrams

Numbered Components

1. O_2 Sensor
2. Tidal Volume Sensor
3. Patient Interface Connections
4. Cable Connection - Patient Interface to Excel
5. Excel Anesthesia Machine
6. System Master Switch
7. Dual Common Gas Outlet (DCGO) Switch (French Excels Only)
8. Excel/Ventilator Connection
9. Ventilator (the 7800 Ventilator is shown)
10. RS232 Connection
    a. Ventilator Connector
    b. 5250 Connector
11. 5250 Respiratory Gas Monitor (RGM)

Connector 1. O_2 Sensor Signals--Routed through the Excel to the Ventilator

Signal	Interpretation	Application
OSHLD	O_2 Sensor Shield	----------
OAGND	O_2 Sensor Analog Ground	----------
SENSA	O_2 Sensor Signal.	Current proportional to O_2 concentration
SENSB	Not Used	----------
TMPCM	Probe Thermistor Signal	Temperature Compensation

Connector 2. Tidal Volume Sensor Signals--Routed through the Excel to the Ventilator

Signal	Interpretation	Application
HTRTN	Return line from heater element	Used to detect presence of tidal volume sensor
SHLD	Shield	----------
TDGND	Digital Ground	----------
PULSEA	Sensor Pulses	Frequency proportional to flow. A leading B is
PULSEB	Sensor Pulses	inspiratory. B leading A is expiratory.
VHTR	Nominal 5 VDC	Sensor Supply
VCLIP	Nominal 5 VDC	Sensor Supply

Connector 6. System Master Switch Signals--Routed through the Excel to the Ventilator

Signal	Interpretation	Application
ANC	Relay A Normally Closed	Not Used
ACOM	Common	
BNO	Relay B Normally Open	Continuity if "ON." Serves as 7800 ON/OFF
BCOM	Common	switch; w/ 7750 indicates gas machine is "ON."

Connector 7. Dual Common Gas Outlet (DCGO) Signals (French Excel Only)- - Routed through the Excel to the Ventilator

Signal	Interpretation	Application
CNC	Relay C Normally Closed; Closure (logic low) = Auxiliary port selected	The 7800 enters the monitoring mode (the French language must be selected on the 7800).
CNO	Relay C Normally Open; Closure (logic low) = Ventilator port selected	The 7750 enables mechanical ventilation
CCOM	Relay C Common	----------

Connector 10. RS-232 Signals--Routed through Excel to 7800

Signal	Interpretation	Application
TXD	Transmit	----------
RXD	Receive	----------
RSGND	RS232 Ground	----------
AL_SIL	Alarm Silence	Logic high indicates ventilator alarm is silenced.
PRES	Analog Pressure	Linear 0-1 Vdc; -20 to 120 cm H_2O
PAGND	Analog Pressure Ground	----------
PSHLD	Analog Pressure Shield	----------
OCONC	Analog O_2 Concentration	0-1Vdc; 0 to 100%

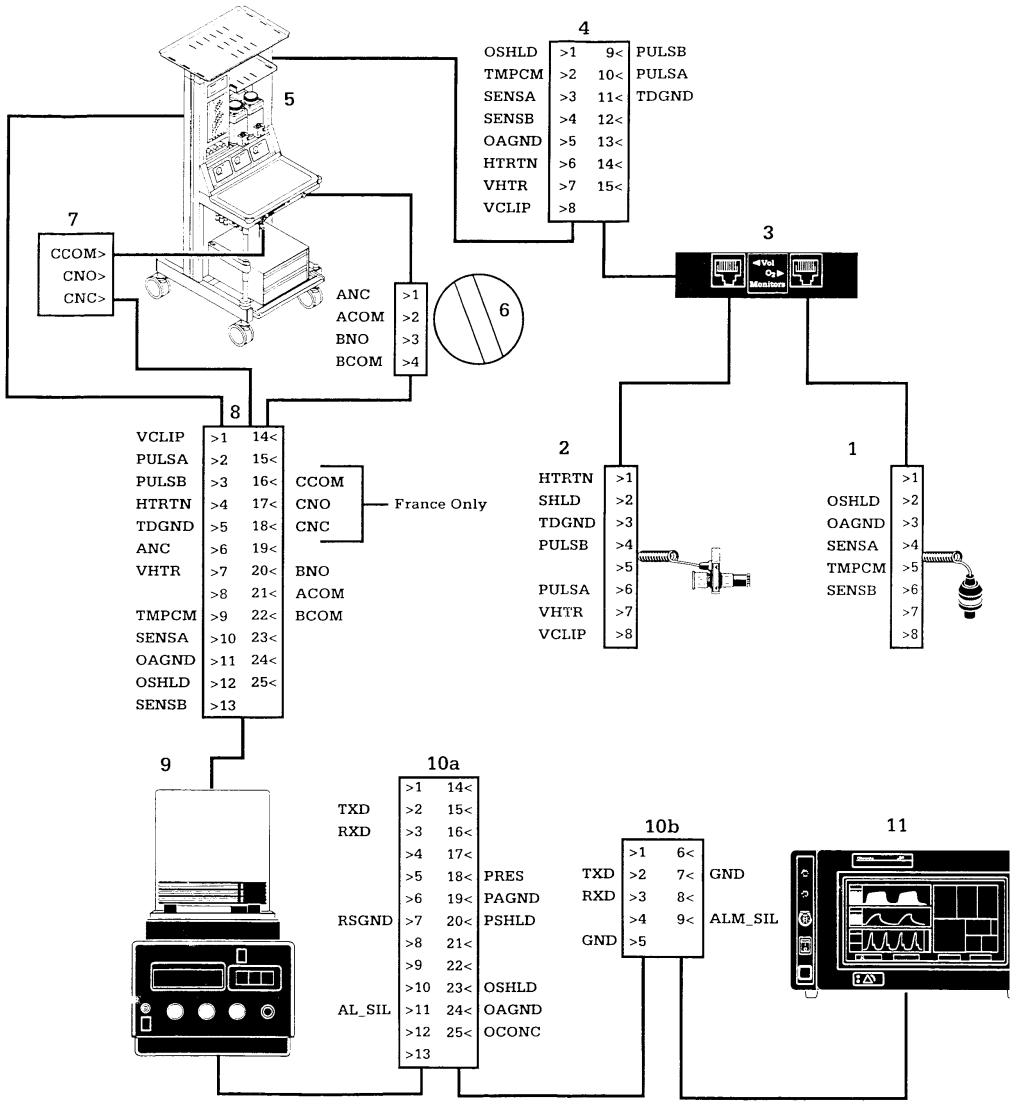

Figure 7-3 Excel system signal routing with 7750 or 7800 ventilator

7.4 Pneumatic Schematics

ISO 210/410, Austrian 210 or Spanish 110 Excels

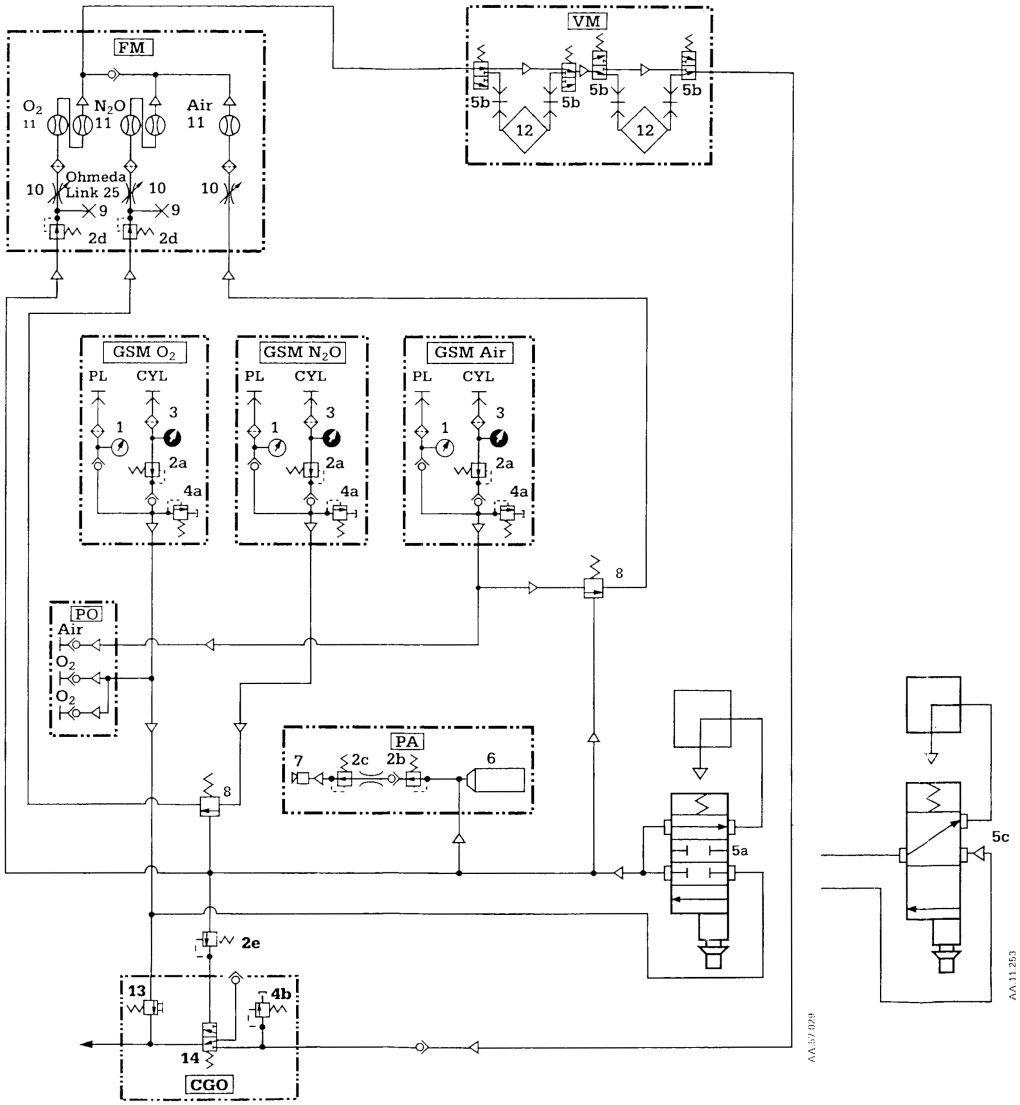

Key to Subassembly Abbreviations

CGO	Common Gas Outlet
CYL	Cylinder Yoke (cylinder supplies not used on the Excel 110)
GSM	Gas Supply Module (O_2, N_2O, Air and CO_2)
FM	Flowmeter
PA	Pneumatic Alarm (triggers at 207±21 kPa)
PL	Pipeline Connection (nominal 414 kPa)
PO	Power Outlets (O_2 and Air, if present)
VM	Vaporizer Manifold

Key to Numbered Components

1. Pipeline Pressure Gauge
2. Regulators
   a. Primary Regulator (O_2, N_2O, Air 380 to 414 kPa, CO_2 207 kPa)
   b. Alarm Regulator (Sets pneumatic alarm threshold)
   c. Flow Regulator (Sets pneumatic alarm duration at 7 sec minimum)
   d. Secondary Regulator (262±3.5 kPa for N_2O; 143±26 kPa for O_2 at 2 L/min)
   e. Air Entrainment Valve Regulator
3. Cylinder Pressure Gauge
4. Pressure Relief Valves
   a. 690 kPa
   b. 27.6 to 38.0 kPa at 200 mL/min
5. Switches
   a. System Master Switch (Current style)
   b. Vaporizer Selector Switch
   c. System Master Switch (Older style)
6. Alarm Reservoir
7. Whistle
8. Shutoff Valve (O_2 pressure > 138 kPa opens valve)
9. Secondary Regulator Test Points
10. Flow Control Needle Valves
    (Maximum flows: O_2 10 - 14 L/min; N_2O 10 - 12 L/min; Air 15 - 17 L/min; CO_2 2 L/min or 500 to 550 mL/min)
    (Minimum flows: O_2 175 to 225 mL/min; all other gases, 0 L/min)
11. Flowtube Assembly
12. Anesthetic Vaporizer
13. Flush Button/Valve (35 to 70 L/min O_2 flush flow)
14. Air Entrainment Valve (Nominal 10 cm H_2O effort to open during O_2 supply failure)

Key to Unnumbered Symbols

- Filter
- Check Valve
- Gas Circuit Fitting
- Gas Circuit Connection
- Direction of Gas Flow

AA 57 030

Figure 7-4 ISO 210 Excel (Air, N_2O, O_2) and Austrian Excel

Australian 210, Italian 110/210, or ISO 110 Excels

Key to Subassembly Abbreviations

CGO	Common Gas Outlet
CYL	Cylinder Yoke (cylinder supplies not used on the Excel 110 or Italian Excels)
GSM	Gas Supply Module (O_2, N_2O, and Air)
FM	Flowmeter
PA	Pneumatic Alarm (triggers at 207±21 kPa)
PL	Pipeline Connection (nominal 414 kPa except for Australian units which use a nominal 345 kPa)
PO	Power Outlets (O_2 and Air, if present)
VM	Vaporizer Manifold

Key to Numbered Components

1. Pipeline Pressure Gauge
2. Regulators
   a. Primary Regulator (O_2, N_2O, Air 380 to 414 kPa, except for Australian units, O_2, N_2O, Air 311 to 345 kPa)
   b. Alarm Regulator (Sets pneumatic alarm threshold)
   c. Flow Regulator (Sets pneumatic alarm duration at 7 sec minimum)
   d. Secondary Regulator (262±3.5 kPa for N_2O; 143±26 kPa for O_2 at 2 L/min)
3. Cylinder Pressure Gauge
4. Pressure Relief Valves
   a. 690 kPa
   b. 27.6 to 38.0 kPa at 200 mL/min
5. Switches
   a. System Master Switch (Current style)
   b. Vaporizer Selector Switch
   c. System Master Switch (Older style)
6. Alarm Reservoir
7. Whistle
8. Shutoff Valve (O_2 pressure > 138 kPa opens valve)
9. Secondary Regulator Test Points
10. Flow Control Needle Valves
    (Maximum flows: O_2 10 - 14 L/min; N_2O 10 - 12 L/min; Air 15 - 17 L/min)
    (Minimum flows: O_2 175 to 225 mL/min; all other gases, 0 L/min)
11. Flowtube Assembly
12. Anesthetic Vaporizer
13. Flush Button/Valve (35 to 70 L/min O_2 flush flow)

Key to Unnumbered Symbols

- Filter
- Check Valve
- Gas Circuit Fitting
- Gas Circuit Connection
- Direction of Gas Flow

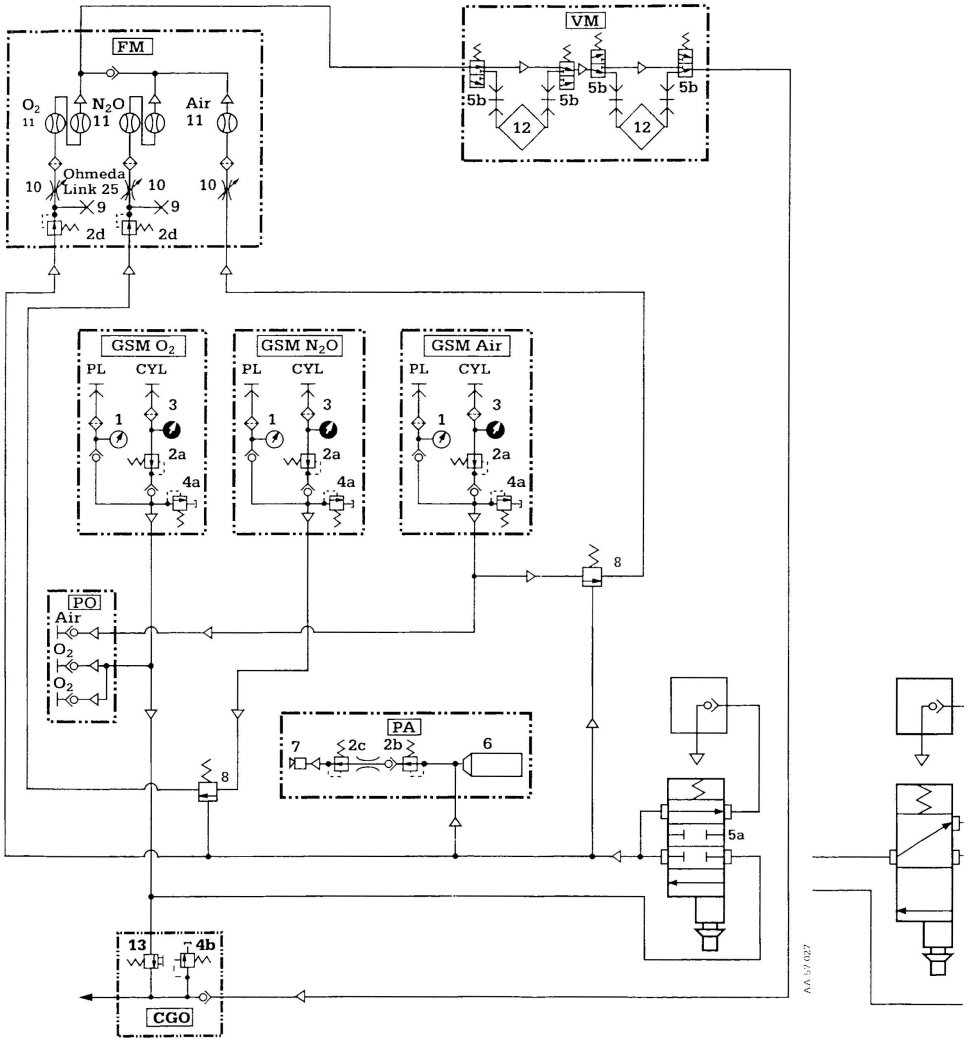

AA 57 031

Figure 7-5 Australian 210 Excel, Italian Excel, or ISO 110 Excel

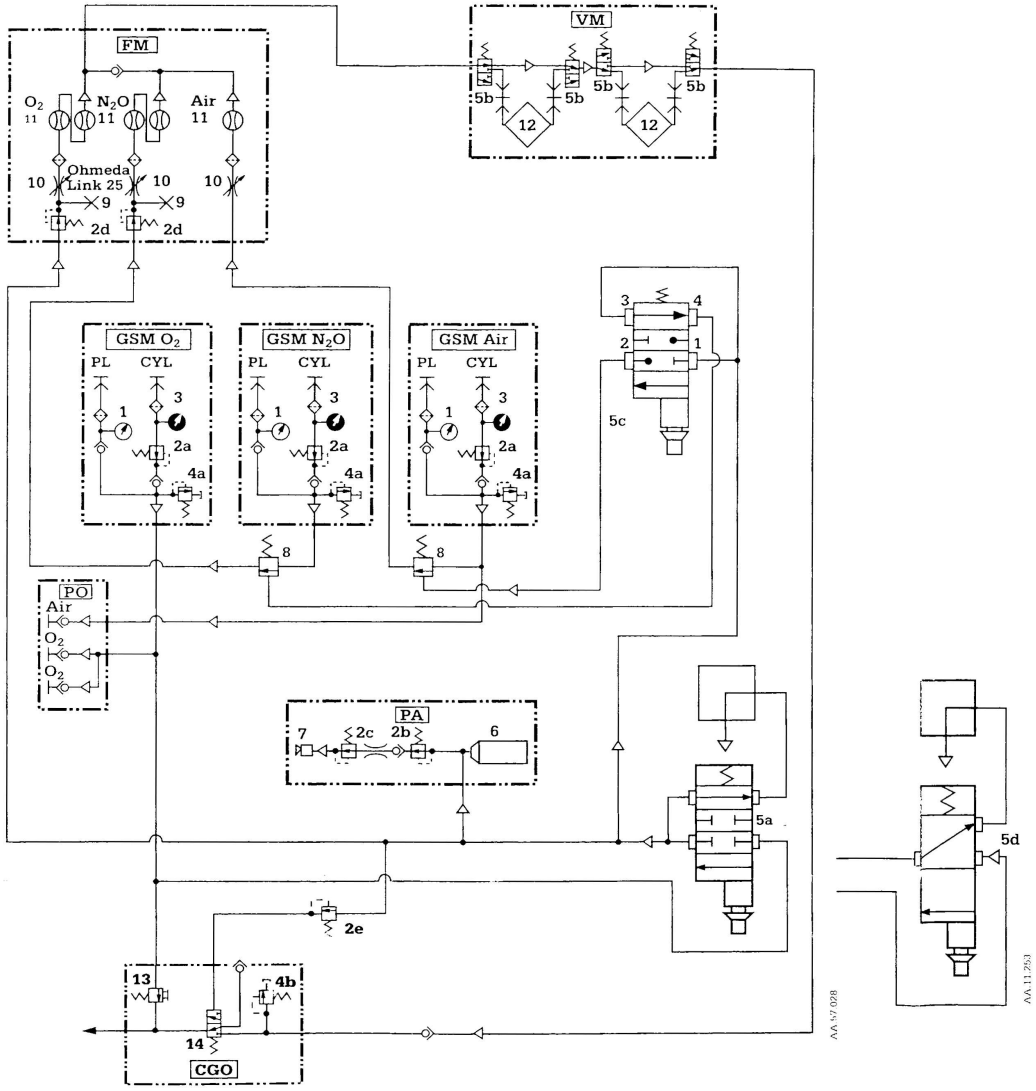

Swiss 210 or Spanish 210 Excel

Key to Subassembly Abbreviations

CGO	Common Gas Outlet
CYL	Cylinder Yoke (cylinder supplies not used on the Spanish Excels)
GSM	Gas Supply Module (O_2, N_2O, and Air)
FM	Flowmeter
PA	Pneumatic Alarm (triggers at 207±21 kPa)
PL	Pipeline Connection (nominal 414 kPa)
PO	Power Outlets (O_2 and Air)
VM	Vaporizer Manifold

Key to Numbered Components

1. Pipeline Pressure Gauge
2. Regulators
   a. Primary Regulator (O_2, N_2O, Air 380 to 414 kPa)
   b. Alarm Regulator (Sets pneumatic alarm threshold)
   c. Flow Regulator (Sets pneumatic alarm duration at 7 sec minimum)
   d. Secondary Regulator (262±3.5 kPa for N_2O; 143±26 kPa for O_2 at 2 L/min)
   e. Air Entrainment Valve Regulator
3. Cylinder Pressure Gauge
4. Pressure Relief Valves
   a. 690 kPa
   b. 27.6 to 38.0 kPa at 200 mL/min
5. Switches
   a. System Master Switch (Current style)
   b. Vaporizer Selector Switch
   c. Air/N_2O Selector Switch
   d. System Master Switch (Older style)
6. Alarm Reservoir
7. Whistle
8. Shutoff Valve (O_2 pressure > 138 kPa opens valve)
9. Secondary Regulator Test Points
10. Flow Control Needle Valves
    (Maximum flows: O_2 10 - 14 L/min; N_2O 10 - 12 L/min; Air 15 - 17 L/min
    (Minimum flows: O_2 175 to 225 mL/min; all other gases, 0 L/min)
11. Flowtube Assembly
12. Anesthetic Vaporizer
13. Flush Button/Valve (35 to 70 L/min)
14. Air Entrainment Valve (Nominal 10 cm H_2O effort to open during O_2 supply failure)

Key to Unnumbered Symbols

Filter

Check Valve

Gas Circuit Fitting

Gas Circuit Connection

Direction of Gas Flow

AA 57 032

Figure 7-6 Swiss 210 or Spanish 210 Excel

Scandinavian 210 Excel

Key to Subassembly Abbreviations

CGO	Common Gas Outlet
CYL	Cylinder Yoke
GSM	Gas Supply Module (O_2, N_2O, and Air)
FM	Flowmeter
PA	Pneumatic Alarm (triggers at 207±21 kPa)
PL	Pipeline Connection (nominal 414 kPa)
PO	Power Outlets (O_2 and Air)
VM	Vaporizer Manifold

Key to Numbered Components

1. Pipeline Pressure Gauge
2. Regulators
   a. Primary Regulator (O_2, N_2O, Air 380 to 414 kPa)
   b. Alarm Regulator (Sets pneumatic alarm threshold)
   c. Flow Regulator (Sets pneumatic alarm duration at 7 sec minimum)
   d. Secondary Regulator (262±3.5 kPa for N_2O; 143±26 kPa for O_2 at 2 L/min)
3. Cylinder Pressure Gauge
4. Pressure Relief Valves
   a. 690 kPa
   b. 27.6 to 38.0 kPa at 200 mL/min
5. Switches
   a. System Master Switch
   b. Vaporizer Selector Switch
   c. Air/N_2O Switch
6. Alarm Reservoir
7. Whistle
8. Shutoff Valve (O_2 pressure > 138 kPa opens valve)
9. Secondary Regulator Test Points
10. Flow Control Needle Valves
    (Maximum flows: O_2 10 - 14 L/min; N_2O 10 - 12 L/min; Air 15 - 17 L/min)
    (Minimum flows: O_2 175 to 225 mL/min; all other gases, 0 L/min)
11. Flowtube Assembly
12. Anesthetic Vaporizer
13. Flush Button/Valve (35 to 70 L/min O_2 flush flow)

Key to Unnumbered Symbols

- Filter
- Check Valve
- Gas Circuit Fitting
- Gas Circuit Connection
- Direction of Gas Flow

AA 57 033

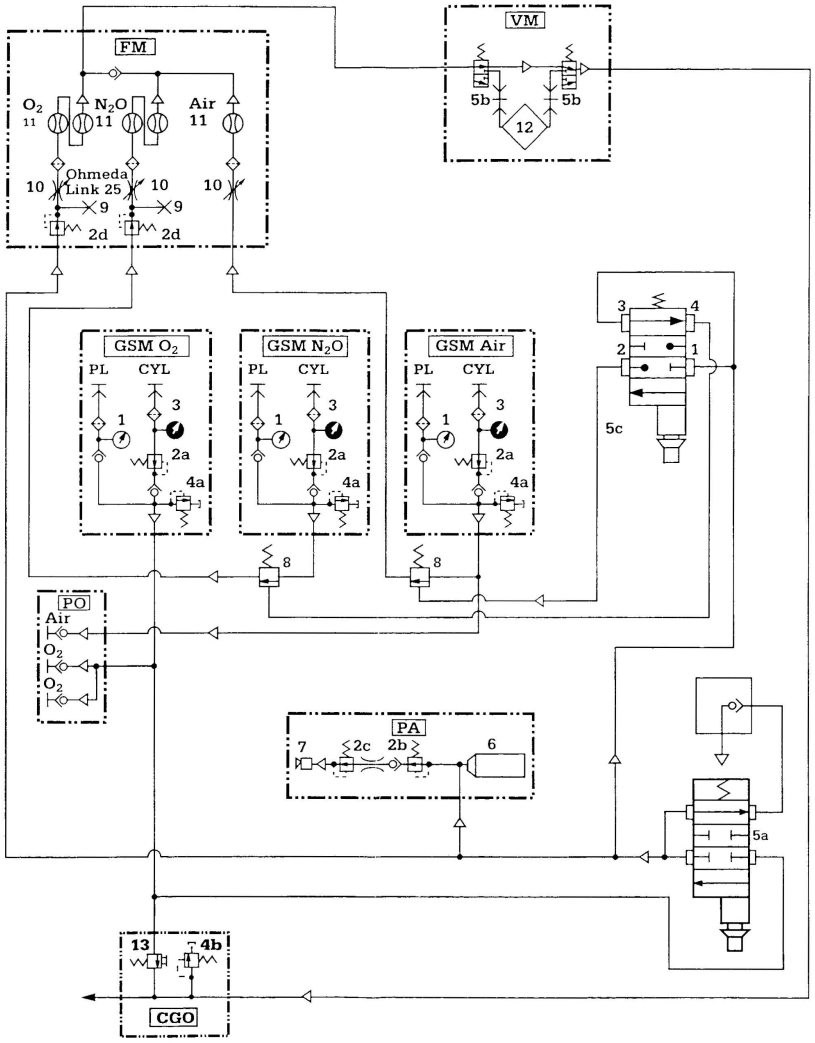

Figure 7-7 Scandinavian 210 Excel

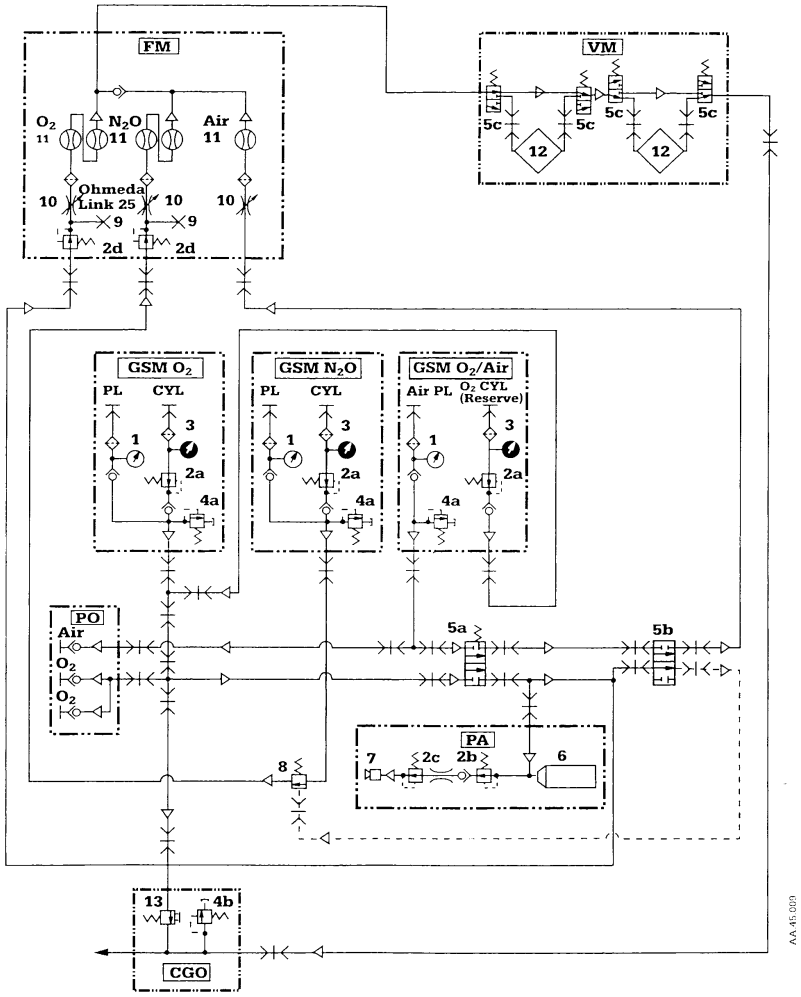

German 210 Excel

Key to Subassembly Abbreviations

CGO	Common Gas Outlet
CYL	Cylinder Yoke
GSM	Gas Supply Module (O_2, N_2O, and Air/O_2)
FM	Flowmeter
PA	Pneumatic Alarm (triggers at 207±21 kPa)
PL	Pipeline Connection (nominal 500 kPa)
PO	Power Outlets (O_2 and Air)
VM	Vaporizer Manifold

Key to Numbered Components

1. Pipeline Pressure Gauge
2. Regulators
   a. Primary Regulator (O_2, N_2O 380 to 414 kPa; reserve O_2 311 to 345 kPa)
   b. Alarm Regulator (Sets pneumatic alarm threshold)
   c. Flow Regulator (Sets pneumatic alarm duration at 7 sec minimum)
   d. Secondary Regulator (262±3.5 kPa for N_2O; 143±26 kPa for O_2 at 2 L/min)
3. Cylinder Pressure Gauge
4. Pressure Relief Valves
   a. 690 kPa
   b. 27.6 to 38.0 kPa at 200 mL/min
5. Switches
   a. System Master Switch (Current Style)
   b. Air/N_2O Switch
   c. Vaporizer Selector Switch
6. Alarm Reservoir
7. Whistle
8. Shutoff Valve (O_2 pressure > 138 kPa opens valve)
9. Secondary Regulator Test Points
10. Flow Control Needle Valves
    (Maximum flows: O_2 10 - 14 L/min; N_2O 10 - 12 L/min; Air 15 - 17 L/min)
    (Minimum flows: O_2 175 to 225 mL/min; all other gases, 0 L/min)
11. Flowtube Assembly
12. Anesthetic Vaporizer
13. Flush Button/Valve (35 to 90 L/min O_2 flush flow)

Key to Unnumbered Symbols

Filter

Check Valve

Gas Circuit Fitting

Gas Circuit Connection

Direction of Gas Flow

AA 45 015

Figure 7-8 German 210 Excel

French 210 Excel

Key to Subassembly Abbreviations

AUX	Manual Circuit Connection
CGO	Common Gas Outlet
CYL	Cylinder Yoke
GSM	Gas Supply Module (O_2, N_2O, and Air)
VENT	Ventilator Circuit Connection
FM	Flowmeter
PA	Pneumatic Alarm (triggers at 207±21 kPa)
PL	Pipeline Connection (nominal 345 kPa)
PO	Power Outlets (O_2 and Air)
VM	Vaporizer Manifold

Key to Numbered Components

1. Pipeline Pressure Gauge
2. Regulators
   a. Primary Regulator (O_2 311 to 345 kPa)
   b. Alarm Regulator (Sets pneumatic alarm threshold)
   c. Flow Regulator (Sets pneumatic alarm duration at 7 sec minimum)
   d. Secondary Regulator (193 to 207 kPa for N_2O; 143 to 169 kPa for O_2 at 2 L/min)
3. Cylinder Pressure Gauge
4. Pressure Relief Valves
   a. 690 kPa
   b. 27.6 to 38.0 kPa at 200 mL/min
5. Switches
   a. System Master Switch (Current style)
   b. Vaporizer Selector Switch
   c. Air/N_2O Selector Switch
   d. Port Selector Switch (Ventilator or Auxiliary Outlet)
   e. System Master Switch (Older style)
6. Alarm Reservoir
7. Whistle
8. Shutoff Valve (O_2 pressure > 138 kPa opens valve)
9. Secondary Regulator Test Points
10. Flow Control Needle Valves
    (Maximum flows: O_2 15 - 17 L/min; N_2O 10 - 12 L/min; Air 15 - 17 L/min
    (Minimum flows: O_2 175 to 225 mL/min; all other gases, 0 L/min)
11. Flowtube Assembly
12. Anesthetic Vaporizer
13. Flush Button/Valve (35 to 70 L/min)
14. O_2 Sampling Connection

Key to Unnumbered Symbols

- Filter
- Check Valve
- Gas Circuit Fitting
- Gas Circuit Connection
- Direction of Gas Flow

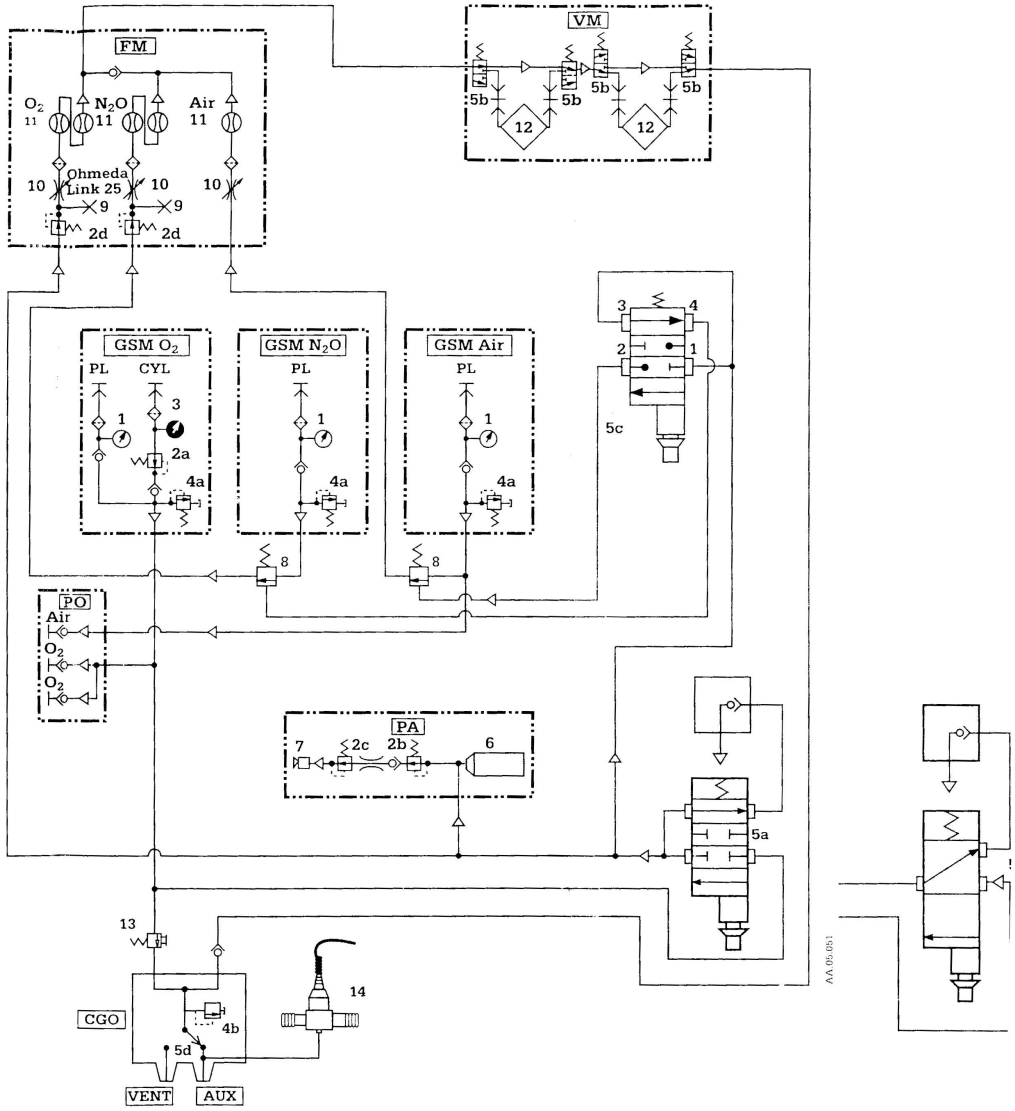

Figure 7-9 French 210 Excel

8/Specifications

8.1 Physical Specifications

Note: All specifications are nominal and subject to change without notice.

Gas Machine
Weight:
410 Excel: 150 kg (330 lb)
210 Excel: 136 kg (300 lb)
110 Excel: 122 kg (270 lb)
Options: Vaporizer, 7.0 kg (15.4 lb.); Absorber, 9.5 kg (21 lb.); IEC 7800 Ventilator 10.8 kg (23.7 lbs).

Height: 168 cm (66 in.) floor to upper most part of top shelf.
Width:

410 Excel only	80.2 cm (31.5 in)
210 Excel only	55.8 cm (22 in)
110 Excel only	50.7 cm (20 in)
GMS Absorber and Absorber Arm	Add 25.5 cm (10 in)

Middle Shelf:
Maximum Load: 11 kg (24 lb.)
Shelf Size (varies slightly with shelf style):

410 Excel	44 cm x 30 cm (17.3 in x 11.8 in)
210 Excel	28 cm x 30 cm (11 in x 11.8 in)
210 Excel*	41 cm x 31.7 cm (18.6 in x 12.5 in)
110 Excel	28 cm x 30 cm (11 in x 11.8 in)

* Full shelf is used on the Australian 210 Excel.

Usable Height:

410 Excel	20.3 cm (8 in)
210 Excel	15.2 cm (6 in)
110 Excel	15.2 cm (6 in)

Top Shelf:
Maximum Load: 23 kg (50 lb.)
Shelf Size:

410 Excel	69.5 cm x 36 cm (27.4 in x 14.2 in)
210 Excel	59 cm x 36 cm (19.3 in x 14.2 in)
110 Excel	54.5 cm x 36 cm (21.5 in x 14.2 in)

Table Top:

410 Excel	76.2 cm x 29.0 cm (30 in x 11.7 in)
210 Excel	55.0 cm x 29.0 cm (21.7 in x 11.7 in)
110 Excel	50.8 cm x 29.0 cm (20.0 in x 11.7 in)

Drawer Cabinet:
Contains two 39.4 cm x 26.7 cm x 10.2 cm (15.5 in. x 10.5 in x 4 in.) drawers.

8.2 Pneumatics

Note: All pressures are nominal.

Pipeline Supplies: O_2, N_2O and air (NIST fittings unless noted)
Supply pressure:

- Austria, ISO, Italy, Spain, Switzerland*, Scandinavia*: 414 kPa (60 psig)
- Germany*: 500 kPa (73 psig)
- Australia*, France: 345 kPa (50 psig)

* Does not use NIST fittings. Switzerland, DISS Male fittings; France, Air Liquide fittings; Scandinavia, Spri fittings; Australia, Australian fittings; Germany, DIN fittings.

Pipeline filter and check valve (All Models)

Cylinder Supplies: Pin indexed yokes for O_2, N_2O and air unless noted
Primary regulator output:

- Austria*, Germany (O_2, N_2O), ISO, Switzerland, Scandinavia: 380 to 414 kPa (55 to 60 psig)
- Australia, France (O_2 only), Germany* (reserve O_2 cylinder): 311 to 345 kPa (45 to 50 psig)
- ISO (CO_2): 207 kPa (30 psig)

* Austrian Excels use DIN connections for all gasses. The German Excel uses a DIN connection for the reserve O_2 cylinder.

Input filter and check valve

Primary regulator diaphragm min burst pressure: 1,750 kPa (250 psig)

Pressure relief valve set to: nominal 690 kPa (100 psig)

Air/N_2O Selector Switch:
Connects selected gas to the flowmeter on the French, German, Scandinavian, and Spanish 210 Excel.

Shutoff valves:
Shutoff valves stop all other gas flows if O_2 supply pressure falls to approximately 138 kPa (20 psig) except on the German Excel (no air shutoff valve).

Flowmeter Module:

Flow ranges:

O_2 Double Tube 0.2-0.95 L/min and 1.0 L/min-10 L/min.
Single Tube 0.2-10 L/min
Minimum O_2 flow 200 mL/min.

N_2O Double Tube 0.04-0.9 L/min and 1.0 L/min-10 L/min.
Single Tube 1-10 L/min

Air Single Tube 1-15 L/min.

CO_2 Single Tube 0.02-0.5 L/min

Percent of Full Scale	Accuracy (% of Reading)
100	±1.60%
90	±1.64%
80	±1.70%
70	±1.77%
60	±1.86%
50	±2.00%
40	±2.20%
30	±2.53%
20	±3.20%
10	±5.20%

Note: Flowtube assemblies are calibrated at 20°C (68°F) and 760 mm Hg (101.3 kPa). Different breathing circuit pressures, barometric pressures or temperatures will affect flowtube accuracy. In some cases, deviations due to different conditions may exceed the specified tolerances.

Common Gas Outlet

Connections:

France: ISO outlet on auxiliary port; bayonet style outlet on ventilator port.
110 Excel, Australia, Italy: bayonet style outlet
All Other Excels: ISO outlet

Air entrainment valve:

Nominal 10 cm H_2O effort required. Not present on the 110 Excel or the French, German, Italian, Australian, or Italian Excels.

Pressure relief valve: 27.6 to 38 kPa (4.0 to 5.5 psig) at minimum flow.

Low O_2 Pressure Alarm:

An alarm sounds for at least seven seconds if the O_2 supply falls below approximately 207 kPa (30 psig); range: 186 to 228 kPa (27 to 33 psig)

Oxygen Flush Button:

Recessed, self-closing push button provides a flow of 35-70 L/min (up to 90 L/min on German Excels) when fully depressed.

8.3 Power outlet pressure as a function of the flow through the outlet

Figure 8-1 Graph 1 shows flow through the power outlets under the following conditions:

Gas supply is maintained at a constant 386 kPa (56 psig) (cylinder gas supply).

The power outlet gas (O_2 or air) flow is 10 L/min to the patient circuit.

There is no flush flow

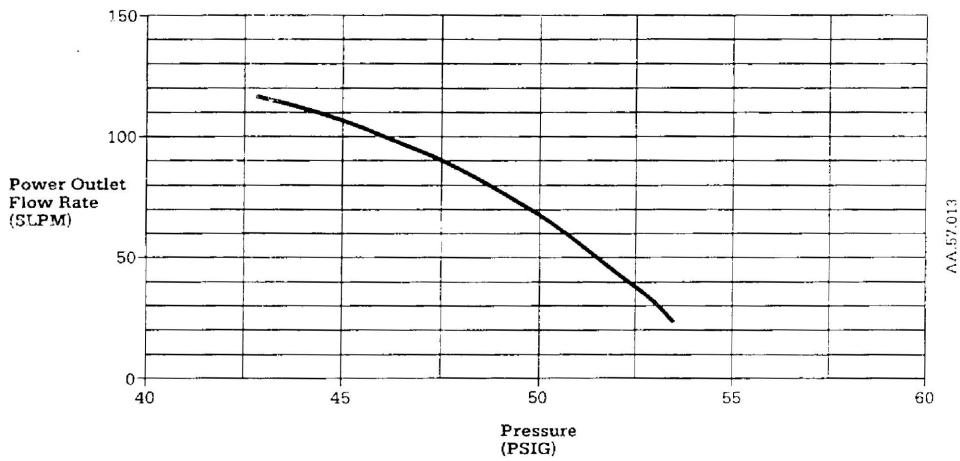

Figure 8-2 Graph 2 shows flow through the power outlets under the following conditions:

Gas supply is maintained at a constant 414 kPa (60psig) (pipeline supply).

The power outlet gas flow is set at the minimum level (0 L/min for air or 200 mL/min for O_2).

There is no flush flow.

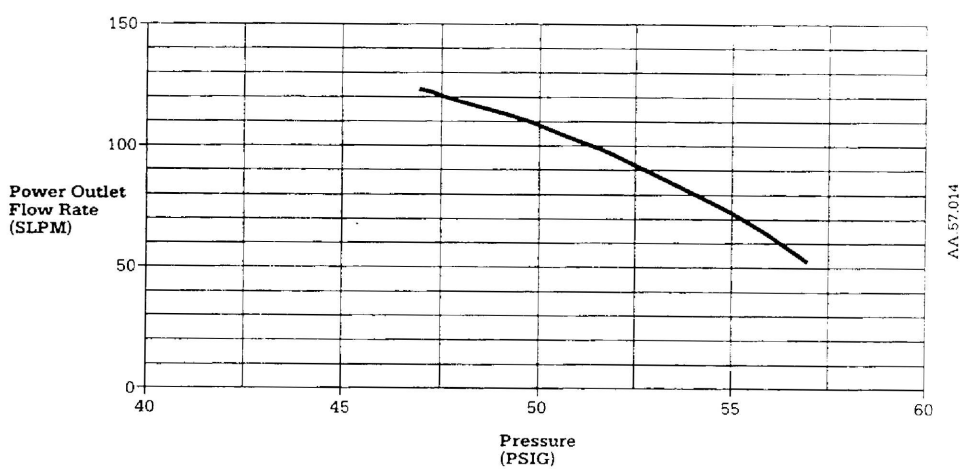

Figure 8-3 Graph 3 shows flow through the O_2 power outlets under the following conditions:

Gas supply is maintained at a constant **414 kPa** (60psig) (pipeline supply).
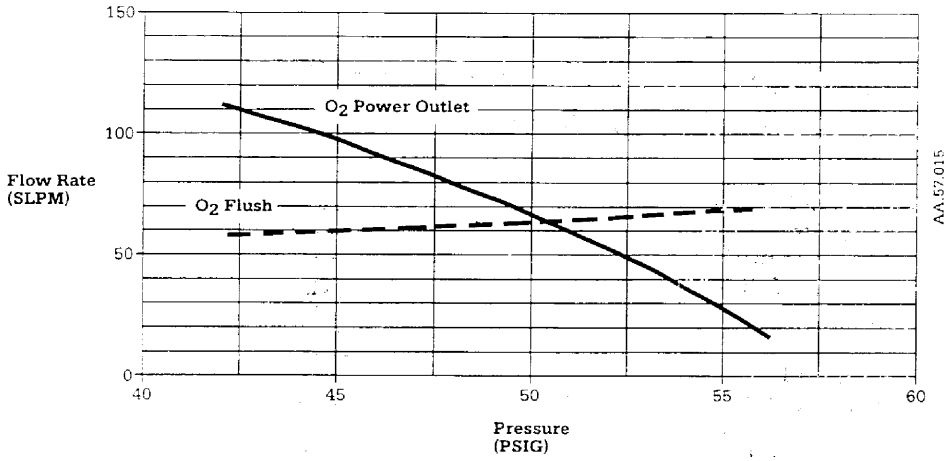
The O_2 flow to the patient circuit is set to 200 mL/min. There is no flush flow.